lenovo

Lenovo Z475/Z575

Hardware Maintenance Manual

Note:

Before using this information and the product it supports, be sure to read the general information under “Notices” on page 99.

First Edition (June 2011)

© Copyright Lenovo 2011.

LIMITED AND RESTRICTED RIGHTS NOTICE: If software or data is delivered pursuant a General Services Administration “GSA” contract, use, reproduction, or disclosure is subject to restrictions set forth in Contract No. GS-35F-05925.

Contents

About this manual ..... **iv**

Safety information **1**
General safety 2
Electrical safety 3
Safety inspection guide 5
Handling devices that are sensitive to electrostatic discharge 6
Grounding requirements 6
Safety notices: multilingual translations 7
Laser compliance statement 14

Important service information **16**
Strategy for replacing FRUs 16
Strategy for replacing a hard disk drive 17
Important notice for replacing a system board 17
Important information about replacing RoHS compliant FRUs 18

General checkout **19**
What to do first 20
Power system checkout 21
Checking the AC adapter 21
Checking operational charging 21
Checking the battery pack 22

Related service information **23**
Restoring the factory contents by using Recovery Disc Set 23
Start Recovery Disc (one disc) 23
Operating System Recovery Disc (one or more discs) 23
Applications and Drivers Recovery Disc (one or more discs) 23
Supplemental Recovery Disc 23
Passwords 24
Power-on password 24
Hard-disk password 24
Supervisor password 24
Power management 25
Screen blank mode 25
Sleep (standby) mode 25
Hibernation mode 26

Lenovo Z475/Z575 ..... **27**
Specifications 27
Status indicators 29
Fn key combinations 31
FRU replacement notices 32
Screw notices 32
Removing and replacing an FRU 33
1010 Battery pack 34
1020 Dummy card 35
1030 Hard disk drive(HDD)/Memory/ Mini PCI Express Card slot compartment cover 36
1040 Hard disk drive 37
1050 Optical drive 39
1060 DIMM 40
1070 PCI Express Mini Card for wireless LAN/WAN 41
1080 Keyboard 43
1090 Keyboard bezel 45
1100 System board 52
1110 LCD unit 55
1120 Fan assembly and Heat Sink assembly 58
1130 CPU 61
1140 Base cover, speakers and bluetooth card 63
1150 LCD front bezel 67
1160 LCD panel, LCD cable and hinges 69
1170 Integrated camera 71
1180 Antenna assembly and LCD cover 72
Locations 73
Front view 73
Right-side view 74
Bottom and Left-side view 75
Parts list 76
Overall 77
LCD FRUs 82
Keyboard 84
Keyboard 86
Keyboard 88
Keyboard 89
Keyboard 91
Keyboard 93
Miscellaneous parts 94
AC adapters 95
Power cords 96

Notices **99**
Trademarks 100

About this manual

This manual contains service and reference information for the following Lenovo product:

IdeaPad Z475/Z575

Use this manual to troubleshoot problems.

The manual is divided into the following sections:

- The common sections provide general information, guidelines, and safety information required for servicing computers.
- The product-specific section includes service, reference, and product-specific parts information.

Important:

This manual is intended only for trained servicers who are familiar with Lenovo products. Use this manual to troubleshoot problems effectively.

Before servicing a Lenovo product, make sure to read all the information under "Safety information" on page 1 and "Important service information" on page 16.

Safety information

This chapter presents the following safety information that you need to get familiar with before you service a Lenovo computer:

- "General safety" on page 2
- "Electrical safety" on page 3
- "Safety inspection guide" on page 5
- "Handling devices that are sensitive to electrostatic discharge" on page 6
- "Grounding requirements" on page 6
- "Safety notices: multilingual translations" on page 7
- "Laser compliance statement" on page 14

General safety

Follow these rules below to ensure general safety:

- Observe a good housekeeping in the area where the machines are put during and after the maintenance.
- When lifting any heavy object:
  1. Make sure that you can stand safely without slipping.
  2. Distribute the weight of the object equally between your feet.
  3. Use a slow lifting force. Never move suddenly or twist when you attempt to lift it.
  4. Lift it by standing or pushing up with your leg muscles; this action could avoid the strain from the muscles in your back. Do not attempt to lift any object that weighs more than 16 kg (35 lb) or that you think is too heavy for you.
- Do not perform any action that causes hazards to the customer, or that makes the machine unsafe.
- Before you start the machine, make sure that other service representatives and the customer are not in a hazardous position.
- Please remove covers and other parts in a safe place, away from all personnel, while you are servicing the machine.
- Keep your toolcase away from walk areas so that other people will not trip it over.
- Do not wear loose clothing that can be trapped in the moving parts of the machine. Make sure that your sleeves are fastened or rolled up above your elbows. If your hair is long, fasten it.
- Insert the ends of your necktie or scarf inside clothing or fasten it with the nonconductive clip, about 8 centimeters (3 inches) from the end.
- Do not wear jewelry, chains, metal-frame eyeglasses, or metal fasteners for your clothing.

  Attention: Metal objects are good electrical conductors.
- Wear safety glasses when you are hammering, drilling, soldering, cutting wire, attaching springs, using solvents, or working in any other conditions that may be hazardous to your eyes.
- After service, reinstall all safety shields, guards, labels, and ground wires. Replace any safety device that is worn or defective.
- Reinstall all covers correctly before returning the machine to the customer.
- Fan louvers on the machine help to prevent the overheating of internal components. Do not obstruct fan louvers or cover them with labels or stickers.

Electrical safety

Observe the following rules when working on electrical equipments.

> **Important:**
> Use only approved tools and test equipments. Some hand tools have handles covered with a soft material that does not insulate you when working with live electrical currents.
> Many customers have rubber floor mats near their machines that contain small conductive fibers to decrease electrostatic discharges. Do not use such kind of mat to protect yourself from electrical shock.

- Find the room emergency power-off (EPO) switch, disconnecting switch, or electrical outlet. If an electrical accident occurs, you can then operate the switch or unplug the power cord quickly.
- Do not work alone under hazardous conditions or near the equipment that has hazardous voltages.
- Disconnect all power before:
  - Performing a mechanical inspection
  - Working near power supplies
  - Removing or installing main units
- Before you start to work on the machine, unplug the power cord. If you cannot unplug it, ask the customer to power-off the wall box that supplies power to the machine, and to lock the wall box in the off position.
- If you need to work on a machine that has exposed electrical circuits, observe the following precautions:
  - Ensure that another person, familiar with the power-off controls, is near you.
    Attention: Another person must be there to switch off the power, if necessary.
  - Use only one hand when working with powered-on electrical equipment; keep the other hand in your pocket or behind your back.
    Attention: An electrical shock can occur only when there is a complete circuit. By observing the above rule, you may prevent a current from passing through your body.
  - When using testers, set the controls correctly and use the approved probe leads and accessories for that tester.
  - Stand on suitable rubber mats (obtained locally, if necessary) to insulate you from grounds such as metal floor strips and machine frames.

Observe the special safety precautions when you work with very high voltages; instructions for these precautions are in the safety sections of maintenance information. Be extremely careful when you measure the high voltages.

- Regularly inspect and maintain your electrical hand tools for safe operational condition.
- Do not use worn or broken tools and testers.
- Never assume that power has been disconnected from a circuit. First, check it to make sure that it has been powered off.

- Always look carefully for possible hazards in your work area. Examples of these hazards are moist floors, nongrounded power extension cables, power surges, and missing safety grounds.
- Do not touch live electrical circuits with the reflective surface of a plastic dental mirror. The surface is conductive; such touching can cause personal injury and machine damage.
- Do not service the following parts with the power on when they are removed from their normal operating places in a machine:
  - Power supply units
  - Pumps
  - Blowers and fans
  - Motor generators

  and similar units. (This practice ensures correct grounding of the units.)
- If an electrical accident occurs:
  - Use caution: do not become a victim yourself.
  - Switch off the power.
  - Send the victim to get medical aid.

Safety inspection guide

The purpose of this inspection guide is to assist you in identifying potential unsafe conditions. As each machine was designed and built, required safety items were installed to protect users and service personnel from injury. This guide addresses only those items. You should use good judgment to identify potential safety hazards due to attachment of non-Lenovo features or options not covered by this inspection guide.

If any unsafe conditions are present, you must determine how serious the apparent hazard could be and whether you can continue without first correcting the problem.

Consider these conditions and the safety hazards they present:

- Electrical hazards, especially primary power (primary voltage on the frame can cause serious or fatal electrical shock)
- Explosive hazards, such as a damaged CRT face or a bulging capacitor
- Mechanical hazards, such as loose or missing hardware

To determine whether there are any potential unsafe conditions, use the following checklist at the beginning of every service task. Begin the checks with the power off, and the power cord disconnected.

Checklist:

1. Check exterior covers for damage (loose, broken, or sharp edges).
2. Turn off the computer. Disconnect the power cord.
3. Check the power cord for:
   a. A third-wire ground connector in good condition. Use a meter to measure third-wire ground continuity for 0.1 ohm or less between the external ground pin and the frame ground.
   b. The power cord should be the type specified in the parts list.
   c. Insulation must not be frayed or worn.
4. Check for cracked or bulging batteries.
5. Remove the cover.
6. Check for any obvious non-Lenovo alterations. Use good judgment as to the safety of any non-Lenovo alterations.
7. Check inside the unit for any obvious unsafe conditions, such as metal filings, contamination, water or other liquids, or signs of fire or smoke damage.
8. Check for worn, frayed, or pinched cables.
9. Check that the power-supply cover fasteners (screws or rivets) have not been removed or tampered with.

Handling devices that are sensitive to electrostatic discharge

Any computer part containing transistors or integrated circuits (ICs) should be considered sensitive to electrostatic discharge (ESD). ESD damage can occur when there is a difference in charge between objects. Protect against ESD damage by equalizing the charge so that the machine, the part, the work mat, and the person handling the part are all at the same charge.

Notes:

1. Use product-specific ESD procedures when they exceed the requirements noted here.
2. Make sure that the ESD protective devices you use have been certified (ISO 9000) as fully effective.

When handling ESD-sensitive parts:

- Keep the parts in protective packages until they are inserted into the product.
- Avoid contact with other people.
- Wear a grounded wrist strap against your skin to eliminate static on your body.
- Prevent the part from touching your clothing. Most clothing is insulative and retains a charge even when you are wearing a wrist strap.
- Use the black side of a grounded work mat to provide a static-free work surface. The mat is especially useful when handling ESD-sensitive devices.
- Select a grounding system, such as those listed below, to provide protection that meets the specific service requirement.

Notes:

The use of a grounding system to guard against ESD damage is desirable but not necessary.

  - Attach the ESD ground clip to any frame ground, ground braid, or green-wire ground.
  - When working on a double-insulated or battery-operated system, use an ESD common ground or reference point. You can use coax or connector-outside shells on these systems.
  - Use the round ground prong of the ac plug on ac-operated computers.

Grounding requirements

Electrical grounding of the computer is required for operator safety and correct system function. Proper grounding of the electrical outlet can be verified by a certified electrician.

Safety notices: multilingual translations

The safety notices in this section are provided in English, French, German, Hebrew, Italian, Japanese, and Spanish.

Safety notice 1

Before the computer is powered on after FRU replacement, make sure all screws, springs, and other small parts are in place and are not left loose inside the computer. Verify this by shaking the computer and listening for rattling sounds. Metallic parts or metal flakes can cause electrical shorts.

Avant de remettre l'ordinateur sous tension après remplacement d'une unité en clientèle, vérifiez que tous les ressorts, vis et autres pièces sont bien en place et bien fixées. Pour ce faire, secouez l'unité et assurez-vous qu'aucun bruit suspect ne se produit. Des pièces métalliques ou des copeaux de métal pourraient causer un court-circuit.

Bevor nach einem FRU-Austausch der Computer wieder angeschlossen wird, muß sichergestellt werden, daß keine Schrauben, Federn oder andere Kleinteile fehlen oder im Gehäuse vergessen wurden. Der Computer muß geschüttelt und auf Klappergeräusche geprüft werden. Metallteile oder-splitter können Kurzschlüsse erzeugen.

לפני הפעלת המחשב לאחר החלפת FRU יש לוודא
שכל הברגים, הקפיצים, וחלקים קטנים אחרים נמצאים
במקומם ואינם חופשיים לזוז בתוך המחשב. כדי לוודא
זאת, יש לטלטל את המחשב ולהקשיב לגילוי קולות שקשוק.
חלקי או שבבי מתכת עלולים לגרום לקצרים חשמליים.

Prima di accendere l'elaboratore dopo che é stata effettuata la sostituzione di una FRU, accertarsi che tutte le viti, le molle e tutte le altri parti di piccole dimensioni siano nella corretta posizione e non siano sparse all'interno dell'elaboratore. Verificare ciò scuotendo l'elaboratore e prestando attenzione ad eventuali rumori; eventuali parti o pezzetti metallici possono provocare cortocircuiti pericolosi.

FRU の交換後、コンピュータの電源を入れる前に、ねじ、バネ、その他の小さな部品がすべて正しい位置にあり、またコンピュータの内部で緩んでいないことを確認してください。
これを確認するには、コンピュータを振って、カチャカチャと音がしないか確かめます。金属部品や金属破片はショートの原因になることがあります。

Antes de encender el sistema despues de sustituir una FRU, compruebe que todos los tornillos, muelles y demás piezas pequeñas se encuentran en su sitio y no se encuentran sueltas dentro del sistema. Compruébelo agitando el sistema y escuchando los posibles ruidos que provocarían. Las piezas metálicas pueden causar cortocircuitos eléctricos.

Safety notice 2

⚠ DANGER

Some standby batteries contain a small amount of nickel and cadmium. Do not disassemble a standby battery, recharge it, throw it into fire or water, or short-circuit it. Dispose of the battery as required by local ordinances or regulations. Use only the battery in the appropriate parts listing. Use of an incorrect battery can result in ignition or explosion of the battery.

Certaines batteries de secours contiennent du nickel et du cadmium. Ne les démontez pas, ne les rechargez pas, ne les exposez ni au feu ni à l'eau. Ne les mettez pas en court-circuit. Pour les mettre au rebut, conformez-vous à la réglementation en vigueur. Lorsque vous remplacez la pile de sauvegarde ou celle de l'horloge temps réel, veillez à n'utiliser que les modèles cités dans la liste de pièces détachées adéquate. Une batterie ou une pile inappropriée risque de prendre feu ou d'exploser.

Die Bereitschaftsbatterie, die sich unter dem Diskettenlaufwerk befindet, kann geringe Mengen Nickel und Cadmium enthalten. Sie darf nicht zerlegt, wiederaufgeladen, kurzgeschlossen, oder Feuer oder Wasser ausgesetzt werden. Bei der Entsorgung die örtlichen Bestimmungen für Sondermüll beachten. Beim Ersetzen der Bereitschafts-oder Systembatterie nur Batterien des Typs verwenden, der in der Ersatzteilliste aufgeführt ist. Der Einsatz falscher Batterien kann zu Entzündung oder Explosion führen.

סוללות המתנה מסוימות מכילות כמות קטנה
של ניקל וקדמיום. אין לפרק סוללת המתנה,
לטעון אותה מחדש, להשליך אותה לאש או
למים או לקצר אותה. יש לסלק את הסוללה
כנדרש על ידי התקנות והחוקים המקומיים. יש
להשתמש רק בסוללה המופיעה ברשימת החלקים
המתאימה. שימוש בסוללה לא מתאימה עלול
לגרום להצתה או התפוצצות של הסוללה.

Alcune batterie di riserva contengono una piccola quantità di nichel e cadmio. Non smontarle, ricaricarle, gettarle nel fuoco o nell'acqua né cortocircuitarle. Smaltirle secondo la normativa in vigore (DPR 915/82, successive disposizioni e disposizioni locali). Quando si sostituisce la batteria dell'RTC (real time clock) o la batteria di supporto, utilizzare soltanto i tipi inseriti nell'appropriato Catalogo parti. L'impiego di una batteria non adatta potrebbe determinare l'incendio o l'esplosione della batteria stessa.

予備バッテリーの中には少量のニッケルとカドミウムが含まれているものがあります。したがって、予備バッテリーの分解、再充電、火または水の中への投棄、またはショートさせることは決して行わないでください。バッテリーを廃棄する場合は地方自治体の条例に従ってください。適切なパーツ・リストにあるバッテリーだけを使用してください。誤ったバッテリーを使用すると、バッテリーが発火したり、爆発したりすることがあります。

Algunas baterías de reserva contienen una pequeña cantidad de níquel y cadmio. No las desmonte, ni recargue, ni las eche al fuego o al agua ni las cortocircuite. Deséchelas tal como dispone la normativa local. Utilice sólo baterías que se encuentren en la lista de piezas. La utilización de una batería no apropiada puede provocar la ignición o explosión de la misma.

Safety notice 3

⚠ DANGER

The battery pack contains small amounts of nickel. Do not disassemble it, throw it into fire or water, or short-circuit it. Dispose of the battery pack as required by local ordinances or regulations. Use only the battery in the appropriate parts listing when replacing the battery pack. Use of an incorrect battery can result in ignition or explosion of the battery.

La batterie contient du nickel. Ne la démontez pas, ne l'exposez ni au feu ni à l'eau. Ne la mettez pas en court-circuit. Pour la mettre au rebut, conformez-vous à la réglementation en vigueur. Lorsque vous remplacez la batterie, veillez à n'utiliser que les modèles cités dans la liste de pièces détachées adéquate. En effet, une batterie inappropriée risque de prendre feu ou d'exploser.

Akkus enthalten geringe Mengen von Nickel. Sie dürfen nicht zerlegt, wiederaufgeladen, kurzgeschlossen, oder Feuer oder Wasser ausgesetzt werden. Bei der Entsorgung die örtlichen Bestimmungen für Sondermüll beachten. Beim Ersetzen der Batterie nur Batterien des Typs verwenden, der in der Ersatzteilliste aufgeführt ist. Der Einsatz falscher Batterien kann zu Entzündung oder Explosion führen.

מארז הסוללה מכיל כמות קטנה של ניקל
וקדמיום. אין לפרק את מארז הסוללה, להשליך
אותו לאש או למים או לקצר אותו. יש לסלק את
מארז הסוללה הסוללה כנדרש על ידי התקנות
והחוקים המקומיים. יש להשתמש רק בסוללה
המופיעה ברשימת החלקים המתאימה בזמן החלפת
מארז הסוללה. שימוש בסוללה לא מתאימה עלול
לגרום להצתה או התפוצצות של הסוללה.

La batteria contiene piccole quantità di nichel. Non smontarla, gettarla nel fuoco o nell'acqua né cortocircuitarla. Smaltirla secondo la normativa in vigore (DPR 915/82, successive disposizioni e disposizioni locali). Quando si sostituisce la batteria, utilizzare soltanto i tipi inseriti nell'appropriato Catalogo parti. L'impiego di una batteria non adatta potrebbe determinare l'incendio o l'esplosione della batteria stessa.

バッテリー・パックには少量のニッケルが含まれています。バッテリー・パックを分解したり、火または水の中に投げ込んだり、ショートさせないでください。バッテリー・パックの廃棄にあたっては、地方自治体の条例または規則に従ってください。バッテリー・パックを交換するときは、適切なパーツ・リストにあるバッテリーだけを使用してください。誤ったバッテリーを使用すると、バッテリーが発火したり、爆発したりすることがあります。

Las baterías contienen pequeñas cantidades de níquel. No las desmonte, ni recargue, ni las eche al fuego o al agua ni las cortocircuite. Deséchelas tal como dispone la normativa local. Utilice sólo baterías que se encuentren en la lista de piezas al sustituir la batería. La utilización de una batería no apropiada puede provocar la ignición o explosión de la misma.

Safety notice 4

⚠ DANGER

The lithium battery can cause a fire, an explosion, or a severe burn. Do not recharge it, remove its polarized connector, disassemble it, heat it above 100°C (212°F), incinerate it, or expose its cell contents to water. Dispose of the battery as required by local ordinances or regulations. Use only the battery in the appropriate parts listing. Use of an incorrect battery can result in ignition or explosion of the battery.

La pile de sauvegarde contient du lithium. Elle présente des risques d'incendie, d'explosion ou de brûlures graves. Ne la rechargez pas, ne retirez pas son connecteur polarisé et ne la démontez pas. Ne l'exposez pas à une temperature supérieure à 100°C, ne la faites pas brûler et n'en exposez pas le contenu à l'eau. Mettez la pile au rebut conformément à la réglementation en vigueur. Une pile inappropriée risque de prendre feu ou d'exploser.

Die Systembatterie ist eine Lithiumbatterie. Sie kann sich entzünden, explodieren oder schwere Verbrennungen hervorrufen. Batterien dieses Typs dürfen nicht aufgeladen, zerlegt, über 100 C erhitzt oder verbrannt werden. Auch darf ihr Inhalt nicht mit Wasser in Verbindung gebracht oder der zur richtigen Polung angebrachte Verbindungsstecker entfernt werden. Bei der Entsorgung die örtlichen Bestimmungen für Sondermüll beachten. Beim Ersetzen der Batterie nur Batterien des Typs verwenden, der in der Ersatzteilliste aufgeführt ist. Der Einsatz falscher Batterien kann zu Entzündung oder Explosion führen.

סוללת הליתיום עלולה לגרום לשריפה, להתפוצצות או לכוויות קשות. אין לטענן אותה מחדש, לסלק את המחבר המקוטב שלה, לפרק אותה או לחמם אותה לטמפרטורה העולה על 100 מעלות צלזיוס. אין לשרוף את הסוללה ואין לחשוף את תוכן התא למים. יש לסלק את הסוללה כנדרש בתקנות ובחוקים המקומיים. יש להשתמש רק בסוללה המופיעה ברשימת החלקים המתאימים. שימוש בסוללה אחרת עלול לגרום לסכנת שריפה או התפוצצות.

La batteria di supporto e una batteria al litio e puo incendiarsi, esplodere o procurare gravi ustioni. Evitare di ricaricarla, smontarne il connettore polarizzato, smontarla, riscaldarla ad una temperatura superiore ai 100 gradi centigradi, incendiarla o gettarla in acqua. Smaltirla secondo la normativa in vigore (DPR 915/82, successive disposizioni e disposizioni locali). L'impiego di una batteria non adatta potrebbe determinare l'incendio o l'esplosione della batteria stessa.

リチウム・バッテリーは、火災、爆発、または重症のやけどを引き起こすことがあります。バックアップ・バッテリーの充電、その極性コネクターの取り外し、バッテリー本体の分解、
100 ℃ (212 ˚F) 以上への加熱、焼却、電池の中身を水に浸すことはしないでください。バッテリーを廃棄する場合は地方自治体の条例に従ってください。適切なパーツ・リストにあるバッテリーだけを使用してください。誤ったバッテリーを使用すると、バッテリーが発火したり、爆発したりすることがあります。

La batería de repuesto es una batería de litio y puede provocar incendios, explosiones o quemaduras graves. No la recargue, ni quite el conector polarizado, ni la desmonte, ni caliente por encima de los 100°C (212°F), ni la incinere ni exponga el contenido de sus celdas al agua. Deséchela tal como dispone la normativa local.

Safety notice 5

If the LCD breaks and the fluid from inside the LCD gets into your eyes or on your hands, immediately wash the affected areas with water at least for 15 minutes. Seek medical care if any symptoms caused by the fluid are present after washing.

Si le panneau d'affichage à cristaux liquides se brise et que vous recevez dans les yeux ou sur les mains une partie du fluide, rincez-les abondamment pendant au moins quinze minutes. Consultez un médecin si des symptômes persistent après le lavage.

Die Leuchtstoffröhre im LCD-Bildschirm enthält Quecksilber. Bei der Entsorgung die örtlichen Bestimmungen für Sondermüll beachten. Der LCD-Bildschirm besteht aus Glas und kann zerbrechen, wenn er unsachgemäß behandelt wird oder der Computer auf den Boden fällt. Wenn der Bildschirm beschädigt ist und die darin befindliche Flüssigkeit in Kontakt mit Haut und Augen gerät, sollten die betroffenen Stellen mindestens 15 Minuten mit Wasser abgespült und bei Beschwerden anschließend ein Arzt aufgesucht werden.

אם מסך הגביש הנוזלי (LCD) נשבר והנוזל מתוך המסך בא במגע
עם עיניכם או ידיכם, שטפו את האזורים הנגועים מיד במים במשך
15 דקות לפחות. פנו לקבלת עזרה רפואית אם תסמינים הנובעים
מהמגע עם הנוזל נמשכים לאחר השטיפה.

Nel caso che caso l'LCD si dovesse rompere ed il liquido in esso contenuto entrasse in contatto con gli occhi o le mani, lavare immediatamente le parti interessate con acqua corrente per almeno 15 minuti; poi consultare un medico se i sintomi dovessero permanere.

LCD が破損し、 LCD の中の液体が目に入ったり、手に触れたりした場合は、液体が触れた部分を少なくとも 15 分間洗い流してください。洗い流した後に、液体によって何らかの症状が現れた場合は、医師の治療を受けてください。

Si la LCD se rompe y el fluido de su interior entra en contacto con sus ojos o sus manos, lave inmediatamente las áreas afectadas con agua durante 15 minutos como mínimo. Obtenga atención medica si se presenta algún

Safety notice 6

⚠ DANGER

Though the main batteries have low voltage, a shorted or grounded battery can produce enough current to burn personnel or combustible materials.

Bien que le voltage des batteries principales soit peu élevé, le court-circuit ou la mise à la masse d'une batterie peut produire suffisamment de courant pour brûler des matériaux combustibles ou causer des brûlures corporelles graves.

Obwohl Hauptbatterien eine niedrige Spannung haben, können sie doch bei Kurzschluß oder Erdung genug Strom abgeben, um brennbare Materialien zu entzünden oder Verletzungen bei Personen hervorzurufen.

אף שהסוללות הראשיות הן בעלות מתח נמוך, סוללה
מקוצרת או מוארקת עלולה להפיק זרם מספיק לגרימת
כוויות או להצתת חומרים דליקים.

Sebbene le batterie di alimentazione siano a basso voltaggio, una batteria in corto circuito o a massa può fornire corrente sufficiente da bruciare materiali combustibili o provocare ustioni ai tecnici di manutenzione.

メイン・バッテリーの電圧は低くても、ショートしたり、接地したバッテリーが、作業者にやけどを負わせたり、可燃物を燃やすだけの電流を発生させる場合があります。

Aunque las baterías principales tienen un voltaje bajo, una batería cortocircuitada o con contacto a tierra puede producir la corriente suficiente como para quemar material combustible o provocar quemaduras en el personal.

Safety notice 7

⚠ DANGER

Before removing any FRU, turn off the computer, unplug all power cords from electrical outlets, remove the battery pack, and then disconnect any interconnecting cables.

Avant de retirer une unité remplaçable en clientèle, mettez le système hors tension, débranchez tous les cordons d'alimentation des socles de prise de courant, retirez la batterie et déconnectez tous les cordons d'interface.

Die Stromzufuhr muß abgeschaltet, alle Stromkabel aus der Steckdose gezogen, der Akku entfernt und alle Verbindungskabel abgenommen sein, bevor eine FRU entfernt wird.

לפני סילוק FRU כלשהו, יש לכבות את המחשב,
לנתק את כל כבלי החשמל משקעי החשמל, להוציא
את מארז הסוללה, ואז לנתק כבלי חיבור אחרים
אם יש כאלה.

Prima di rimuovere qualsiasi FRU, spegnere il sistema, scollegare dalle prese elettriche tutti i cavi di alimentazione, rimuovere la batteria e poi scollegare i cavi di interconnessione.

FRU を取り外す前に、 ThinkPad の電源を切って、すべての電源コードをコンセントから外してください。次に、バッテリー・パックを外し、相互接続ケーブルを外してください。

Antes de quitar una FRU, apague el sistema, desenchufe todos los cables de las tomas de corriente eléctrica, quite la batería y, a continuación, desconecte cualquier cable de conexión entre dispositivos.

Laser compliance statement

Some models of Lenovo computer are equipped from the factory with an optical storage device such as a CD-ROM drive or a DVD-ROM drive. Such devices are also sold separately as options. If one of these drives is installed, it is certified in the U.S. to conform to the requirements of the Department of Health and Human Services 21 Code of Federal Regulations (DHHS 21 CFR) Subchapter J for Class 1 laser products. Elsewhere, the drive is certified to conform to the requirements of the International Electrotechnical Commission (IEC) 825 and CENELEC EN 60 825 for Class 1 laser products.

If a CD-ROM drive, a DVD-ROM drive, or another laser device is installed, note the following:

⚠ CAUTION

Use of controls or adjustments or performance of procedures other than those specified herein might result in hazardous radiation exposure.

O uso de controles, ajustes ou desempenho de procedimentos diferentes daqueles aqui especificados pode resultar em perigosa exposição à radiação.

凡未在这里指明的任何控制用法、调整、行为，
都会导致严重后果。

Pour éviter tout risque d'exposition au rayon laser, respectez les consignes de réglage et d'utilisation des commandes, ainsi que les procédures décrites.

Werden Steuer- und Einstellelemente anders als hier festgesetzt verwendet, kann gefährliche Laserstrahlung auftreten.

Az itt előírt eljárásoktól, beállításoktól és vezérlésektől
eltérni a lézersugárzás veszélye miatt kockázatos !

L'utilizzo di controlli, regolazioni o l'esecuzione di procedure diverse da quelle specificate possono provocare l'esposizione a.

Использование элементов настройки и
выполнение процедур иных, чем указано
здесь, может привести к опасному
радиационному облучению.

Použitie kontrôl, úprav alebo iných vykonaní od iných
výrobcov, ako je v tomto špecifikované, mohlo by mať
za následok nebezpečenstvo vystavenia sa vyžiarovaniu.

本書で指定された内容以外の、お客様による整備、調整、または手順を行った場合、レーザー光の放射の危険があります。

El uso de controles o ajustes o la ejecución de procedimientos distintos de los aquí especificados puede provocar la exposición a radiaciones peligrosas.

Opening the CD-ROM drive, the DVD-ROM drive, or any other optical storage device could result in exposure to hazardous laser radiation. There are no serviceable parts inside those drives. **Do not open**.

A CD-ROM drive, a DVD-ROM drive, or any other storage device installed may contain an embedded Class 3A or Class 3B laser diode. Note the following:

⚠ DANGER

Emits visible and invisible laser radiation when open. Do not stare into the beam, do not view directly with optical instruments, and avoid direct exposure to the beam.

Radiação por raio laser ao abrir. Não olhe fixo no feixe de luz, não olhe diretamente por meio de instrumentos óticos e evite exposição direta com o feixe de luz.

开启时会有激光发射时，请勿盯视激光光束，请勿直接查看
视觉仪器，并且避免直接接触在激光光束之中。

Rayonnement laser si carter ouvert. Évitez de fixer le faisceau, de le regarder directement avec des instruments optiques, ou de vous exposer au rayon.

Laserstrahlung bei geöffnetem Gerät. Nicht direkt oder über optische Instrumente in den Laserstrahl sehen und den Strahlungsbereich meiden.

Kinyitáskor lézersugár ! Ne nézzen bele se szabad szemmel, se optikai eszközökkel. Kerülje a sugárnyalábbal való érintkezést!

Aprendo l'unità vengono emesse radiazioni laser. Non fissare il fascio, non guardarlo direttamente con strumenti ottici e evitare l'esposizione diretta al fascio.

Открывая, берегитесь лазерного излучения.
Не смотрите на луч, не разглядывайте его
с помощью оптических инструментов, а также
избегайте прямого воздействия лазерного луча.

Keď je laserová jednotka otvorená. Vyhnite sa priamemu
pohľadu a nehľadte priamo s optickými nástrojmi do ľúča
a vyhnite sa priamemu vystaveniu ľúčov.

開けるとレーザー光が放射されます。光線を見つめたり、光学機械を使って直接見たりしないでください。

Radiación láser al abrir. No mire fijamente ni examine con instrumental óptico el haz de luz. Evite la exposición directa al haz.

Important service information

This chapter presents the following important service information:

- "Strategy for replacing FRUs" on page 16
  - "Strategy for replacing a hard disk drive" on page 17
  - "Important notice for replacing a system board" on page 17
- "Important information about replacing RoHS compliant FRUs" on page 18

Important:
BIOS and device driver fixes are customer-installable. The BIOS and device drivers are posted on the customer support site: http://consumersupport.lenovo.com/.

Strategy for replacing FRUs

Before replacing parts:

Make sure that all software fixes, drivers, and BIOS downloads are installed before replacing any FRUs listed in this manual.

After a system board is replaced, ensure that the latest BIOS is loaded to the system board before completing the service action.

To download software fixes, drivers, and BIOS, follow the steps below:

1. Go to http://consumersupport.lenovo.com/.
2. Enter the serial number or select a product or use Lenovo smart downloading.
3. Select the BIOS/Driver/Applications and download.
4. Follow the directions on the screen and install the necessary software.

Use the following strategy to prevent unnecessary expense for replacing and servicing FRUs:

- If you are instructed to replace an FRU, but the replacement does not solve the problem, reinstall the original FRU before you continue.
- Some computers have both a processor board and a system board. If you are instructed to replace either of them, and replacing one of them does not solve the problem, reinstall that board, and then replace the other one.
- If an adapter or a device consists of more than one FRU, any of the FRUs may be the cause of the error. Before replacing the adapter or device, remove the FRUs one by one to see if the symptoms change. Replace only the FRU that changed the symptoms.

Attention: The setup configuration on the computer you are servicing may have been customized. Running Automatic Configuration may alter the settings. Note the current configuration settings (using the View Configuration option); then, when service has been completed, verify that those settings remain in effect.

Strategy for replacing a hard disk drive

Always try to run a low-level format before replacing a hard disk drive. This will cause all customer data on the hard disk to be lost. Make sure that the customer has a current backup of the data before performing this action.

Attention: The drive startup sequence in the computer you are servicing may have been changed. Be extremely careful during write operations such as copying, saving, or formatting. If you select an incorrect drive, data or programs can be overwritten.

Important notice for replacing a system board

Some components mounted on a system board are very sensitive. Improper handling can cause damage to those components, and may cause a system malfunction.

Attention: When handling a system board:

- Do not drop the system board or apply any excessive force to it.
- Avoid rough handling of any kind.
- Avoid bending the system board and hard pushing to prevent cracking at each BGA (Ball Grid Array) chipset.

Important information about replacing RoHS compliant FRUs

RoHS, The Restriction of Hazardous Substances in Electrical and Electronic Equipment Directive (2002/95/EC) is a European Union legal requirement affecting the global electronics industry. RoHS requirements must be implemented on Lenovo products placed on the market after June 2006. Products on the market before June 2006 are not required to have RoHS compliant parts. If the original FRU parts are non-compliant, replacement parts can also be non-compliant. In all cases if the original FRU parts are RoHS compliant, the replacement part must also be RoHS compliant.

Note: RoHS and non-RoHS FRU part numbers with the same fit and function are identified with unique FRU part numbers.

Lenovo plans to transit to RoHS compliance well before the implementation date and expects its suppliers to be ready to support Lenovo's requirements and schedule in the EU. Products sold in 2005 and 2006 will contain some RoHS compliant FRUs. The following statement pertains to these products and any product Lenovo produces containing RoHS compliant FRUs.

RoHS compliant FRUs have unique FRU part numbers. Before or after the RoHS implementation date, failed RoHS compliant parts must always be replaced with RoHS compliant ones, so only the FRUs identified as compliant in the system HMM or direct substitutions for those FRUs may be used.

Products marketed before June 2006		Products marketed after June 2006	
Current or original part	**Replacement FRU**	**Current or original part**	**Replacement FRU**
Non-RoHS	Can be Non-RoHS	Must be RoHS	Must be RoHS
Non-RoHS	Can be RoHS		
Non-RoHS	Can sub to RoHS		
RoHS	Must be RoHS		

Note: A direct substitution is a part with a different FRU part number that is automatically shipped by the distribution center at the time of the order.

General checkout

This chapter presents the following information:

- "What to do first" on page 20
- "Power system checkout" on page 21

Before you go to the checkout, make sure to read the following important notes:

Important notes:

- **Only certified trained personnel can service the computer.**
- **Before replacing any FRU, read the entire page on removing and replacing FRUs.**
- **When you replace FRUs, use new nylon-coated screws.**
- **Be extremely careful during such write operations as copying, saving, or formatting.** Drives in the computer that you are servicing sequence might have been altered. If you select an incorrect drive, data or programs might be overwritten.
- **Replace an FRU only with another FRU of the correct model.** When you replace an FRU, make sure that the machine model and the FRU part number are correct by referring to the FRU parts list.
- **An FRU should not be replaced just because of a single, unreproducible failure.** Single failures can occur for a variety of reasons that have nothing to do with a hardware defect, such as cosmic radiation, electrostatic discharge, or software errors. Consider replacing an FRU only when a problem recurs. If you suspect that an FRU is defective, clear the error logs and run the test again. If the error does not recur, do not replace the FRU.
- **Be careful not to replace a nondefective FRU.**

What to do first

When you do return an FRU, you must include the following information in the parts exchange form or parts return form that you attach to it:

1. Name and phone number of servicer
2. Date of service
3. Date on which the machine failed
4. Date of purchase
5. Procedure index and page number in which the failing FRU was detected
6. Failing FRU name and part number
7. Machine type, model number, and serial number
8. Customer's name and address

Note for warranty: During the warranty period, the customer may be responsible for repair costs if the computer damage was caused by misuse, accident, modification, unsuitable physical or operating environment, or improper maintenance by the customer.

The following is a list of some common items that are not covered under warranty and some symptoms that might indicate that the system was subjected to stress beyond normal use.

Before checking problems with the computer, determine whether the damage is covered under the warranty by referring to the following list:

The following are not covered under warranty:

- LCD panel cracked from the application of excessive force or from being dropped
- Scratched (cosmetic) parts
- Distortion, deformation, or discoloration of the cosmetic parts
- Plastic parts, latches, pins, or connectors that have been cracked or broken by excessive force
- Damage caused by liquid spilled into the system
- Damage caused by the improper insertion of a PC Card or the installation of an incompatible card
- Improper disk insertion or use of an optical drive
- Diskette drive damage caused by pressure on the diskette drive cover, foreign material in the drive, or the insertion of a diskette with multiple labels
- Damaged or bent diskette eject button
- Fuses blown by attachment of a nonsupported device
- Forgotten computer password (making the computer unusable)
- Sticky keys caused by spilling a liquid onto the keyboard
- Use of an incorrect AC adapter on laptop products

The following symptoms might indicate damage caused by nonwarranted activities:

- Missing parts might be a symptom of unauthorized service or modification.
- If the spindle of a hard disk drive becomes noisy, it may have been subjected to excessive force, or dropped.

Power system checkout

To verify a symptom, follow the steps below:

1. Turn off the computer.
2. Remove the battery pack.
3. Connect the AC adapter.
4. Make sure that power is supplied when you turn on the computer.
5. Turn off the computer.
6. Disconnect the AC adapter and install the charged battery pack.
7. Make sure that the battery pack supplies power when you turn on the computer.

If you suspect a power problem, see the appropriate one of the following power supply checkouts:

- "Checking the AC adapter" on page 21
- "Checking operational charging" on page 21
- "Checking the battery pack" on page 22

Checking the AC adapter

You are here because the computer fails only when the AC adapter is used.

- If the power-on indicator does not turn on, check the power cord of the AC adapter for correct continuity and installation.
- If the computer does not charge during operation, go to "Checking operational charging".

To check the AC adapter, follow the steps below:

1. Unplug the AC adapter cable from the computer.
2. Measure the output voltage at the plug of the AC adapter cable. See the following figure:

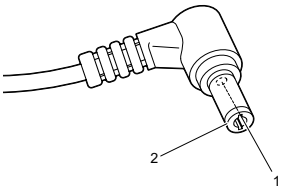

Pin	Voltage (V DC)
1	+20
2	0

Note: Output voltage for the AC adapter pin No. 2 may differ from the one you are servicing.

3. If the voltage is not correct, replace the AC adapter.
4. If the voltage is acceptable, do the following:

- Replace the system board.
- If the problem persists, go to "Lenovo Z475/Z575" on page 27.

Note: Noise from the AC adapter does not always indicate a defect.

Checking operational charging

To check whether the battery charges properly during operation, use a discharged battery pack or a battery pack that has less than 50% of the total power remaining when installed in the computer.

Perform operational charging. If the battery status indicator or icon does not light on, remove the battery pack and let it return to room temperature. Reinstall the battery pack. If the charge indicator or icon is still off, replace the battery pack.

If the charge indicator still does not light on, replace the system board. Then reinstall the battery pack. If it is still not charged, go to the next section.

Checking the battery pack

Battery charging does not start until the Power Meter shows that less than 95% of the total power remains; under this condition the battery pack can charge to 100% of its capacity. This protects the battery pack from being overcharged or from having a shortened life.

To check your battery, move your cursor to the Power Meter icon in the icon tray of the Windows® taskbar and wait for a moment (but do not click it), and the percentage of battery power remaining is displayed. To get detailed information about the battery, double-click the Power Meter icon.

Note: If the battery pack becomes hot, it may not be able to be charged. Remove it from the computer and leave it at room temperature for a while. After it cools down, reinstall and recharge it.

To check the battery pack, follow the steps below:

1. Turn off the computer.
2. Remove the battery pack and measure the voltage between battery terminals 1 (+) and 7 (-). See the following figure:

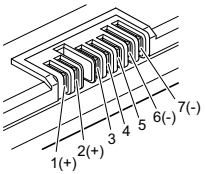

Terminal	Voltage (V DC)
1	+0 to +14
7	Ground (-)

3. If the voltage is less than +9.0 V DC, the battery pack has been discharged.

   Note: Recharging will be continued for at least 3 hours, even though the indicator does not light on.

   If the voltage is still less than +9.0 V DC after recharging, replace the battery.
4. If the voltage is more than +9.0 V DC, measure the resistance between battery terminals 5 and 7. The resistance must be 4 to 30 KΩ.
   If the resistance is not correct, replace the battery pack. If the resistance is correct, replace the system board.

Related service information

This chapter presents the following information:

- "Restoring the factory contents by using Recovery Disc Set" on page 23
- "Passwords" on page 24
- "Power management" on page 25

Restoring the factory contents by using Recovery Disc Set

When the hard disk drive or solid state drive is replaced because of a failure, no product recovery program is on the new drive. In this case, you must use the *Recovery Disc Set* for the computer. Order the *Recovery Disc Set* and the drive at the same time so that you can recover the new drive with the pre-installed software when they arrive.

The *Recovery Disc Set* consists of the following set of DVDs to restore the computer to the original factory configuration.

Start Recovery Disc (one disc)

This disc is used to format the hard disk drive and initiate the recovery process.

Operating System Recovery Disc (one or more discs)

This disc restores the Microsoft Windows operating system.

Applications and Drivers Recovery Disc (one or more discs)

This disc restores the pre-installed applications and drivers on the computer.

Supplemental Recovery Disc

This disc contains additional content, such as software for specific models and updates to the software that was preloaded on the computer. Not all recovery disc sets come with a *Supplemental Recovery Disc*.

To restore the computer to the original factory configuration using the recovery disc set, do the following:

1. Insert the bootable *Start Recovery Disc* into the optical drive.
2. Start the computer. When the Lenovo logo comes up, immediately press F12; on the boot sequence menu, select the optical drive as the first boot-up device. The computer will boot from the *Start Recovery Disc*. Follow the on-screen instructions to begin the recovery process.
3. Read the license. If you agree with the terms, select **I accept these terms and conditions** and then click **Next**.
4. Insert the **Operating System Recovery Disc** when prompted and click **Yes** to begin the operating system recovery process.
5. Insert the *Applications and Drivers Recovery Disc* when prompted and then click **OK** to begin the applications and drivers recovery process.
6. If you have a *Supplemental Recovery Disc*, insert it when prompted and click **Yes**. If you do not have a *Supplemental Recovery Disc*, click **No**.

7. When all of the data has been copied from the last disc in the set, remove the disc and restart the computer.

Note: The remainder of the recovery process is fully automated and no action is required by you. The computer will restart into the Windows desktop several times and you might experience periods when no activity is apparent on the screen for several minutes at a time. This is normal.

8. When the recovery process is complete, the Welcome to the Microsoft Windows screen is displayed. Follow the instructions on the screen to complete the Windows setup.

Passwords

As many as three passwords may be needed for any Lenovo computer: the power-on password (POP), the hard disk password (HDP), and the supervisor password (SVP).

If any of these passwords has been set, a prompt for it appears on the screen whenever the computer is turned on. The computer does not start until the password is entered.

Exception: If only an SVP is installed, the password prompt does not appear when the operating system is booted.

Power-on password

A power-on password (POP) protects the system from being powered on by an unauthorized person. The password must be entered before an operating system can be booted.

Hard-disk password

There are two hard-disk passwords (HDPs):

+ User HDP - for the user

+ Master HDP - for the system administrator, who can use it to get access to the hard disk drive even if the user has changed the user HDP

Attention: If the user HDP has been forgotten, check whether a master HDP has been set. If it has, it can be used for access to the hard disk drive. If no master HDP is available, neither Lenovo nor Lenov authorized service technicians provide any services to reset either the user or the master HDP, or to recover data from the hard disk drive. The hard disk drive can be replaced for a scheduled fee.

Supervisor password

A supervisor password (SVP) protects the system information stored in the BIOS Setup Utility. The user must enter the SVP in order to get access to the BIOS Setup Utility and change the system configuration.

Attention: If the SVP has been forgotten and cannot be made available to the servicer, there is no service procedure to reset the password. The system board must be replaced for a scheduled fee.

Power management

Note: Power management modes are not supported for APM operating system.

To reduce power consumption, the computer has three power management modes: screen blank, sleep (standby), and hibernation.

Screen blank mode

If the time set on the "Turn off monitor" timer in the operating system expires, the LCD backlight turns off. You can also turn off the LCD backlight by pressing Fn+F2.

To end screen blank mode and resume normal operation, press any key.

Sleep (standby) mode

When the computer enters sleep (standby) mode, the following events occur in addition to what occurs in screen blank mode:

- The LCD is powered off.
- The hard disk drive is powered off.
- The CPU stops.

To enter sleep (standby) mode, press Fn+F1.

In certain circumstances, the computer goes into sleep (standby) mode automatically:

- If a "suspend time" has been set on the timer, and the user does not do any operation with the keyboard, the hard disk, the parallel connector, or the diskette drive within that time.
- If the battery indicator is amber, indicating that the battery power is low. (Alternatively, if **Hibernate when battery becomes low** has been selected in the "Power Management Properties" window, the computer goes into hibernation mode.)

To cause the computer to return from sleep (standby) mode and resume the operation, do one of the following:

- Press the Fn key.
- Open the lid.
- Turn on the power switch.

Also, in the following event, the computer automatically returns from sleep (standby) mode and resumes the operation:

- The time set on the resume timer elapses.

Note: The computer does not accept any input immediately after it enters sleep (standby) mode. Wait a few seconds before taking any action to reenter operation mode.

Hibernation mode

In hibernation mode, the following occurs:

- The system status, RAM, VRAM, and setup data are stored on the hard disk.
- The system is powered off.

To cause the computer to enter hibernation mode, follow the steps below:

- If you are using the ACPI operating system and have defined one of the following actions as the event that causes the system to go into hibernation mode, perform that action:
  - Closing the lid.
  - Pressing the power button.

Also, the computer goes into hibernation mode automatically in either of the following conditions:

- If a “hibernation time” has been set on the timer, and if the user does not do any operation with the keyboard, the hard disk drive, the parallel connector, or the diskette drive within that time.
- If the timer conditions are satisfied in suspend mode.

When the power is turned on, the computer returns from hibernation mode and resumes operation. The hibernation file in the boot record on the hard disk drive is read, and system status is restored from the hard disk drive.

Lenovo Z475/Z575

This chapter presents the following product-specific service references and product-specific parts information:

- "Specifications" on page 27
- "Status indicators" on page 29
- "FRU tests" on page 31
- "Fn key combinations" on page 31
- "FRU replacement notices" on page 32
- "Removing and replacing an FRU" on page 33
- "Locations" on page 73
- "Parts list" on page 76

Specifications

The following table lists the specifications of the Lenovo Z475/Z575:

Table 1. Specifications

Feature	Description
Processor	AMD Liano APU • AMD A8-3500M 2.4GHz/1.5GHz • AMD A6-3400M 2.3GHz/1.4GHz • AMD A4-3300M 2.5GHz/1.9GHz • AMD E2-3000M 1.8GHz
South bridge	• AMD Hudson River M2 A60M • AMD Hudson River M3 A70M
Integrated graphics	• Radeon HD6620G (AMD A8-3500M) • Radeon HD6520G (AMD A6-3400M) • Radeon HD6480G (AMD A4-3300M) • Radeon HD6380G (AMD E2-3000M)
Discreet graphics (on select models)	• Radeon HD6650M • Radeon HD6470M
Display	• 14.0 HD, LED backlight, flat type, 1366 x 768 pixels, 220 nit (Z475) • 15.6 HD, LED backlight, flat type, 1366 x 768 pixels, 220 nit (Z575)
Memory	• DDR III SDRAM, 1333MHz, 1GB • DDR III SDRAM, 1333MHz, 2GB • DDR III SDRAM, 1333MHz, 4GB
Hard disk drive	• 5400rpm, 7mm or 9.5mm, 250GB/320GB/500GB/640GB/750GB • 7200rpm, 7mm or 9.5mm, 320GB • 7200rpm, 9.5mm, 500GB
Optical disk drive	• Rambo • Blu-ray Combo • Blu-ray Rambo

Table 1. Specifications (continued)

Feature	Description
I/O port	• VGA port x 1 • Stereo headphone jack x 1 • Microphone jack x 1 • RJ-45 port x 1 • HDMI port x 1 • USB 2.0 port x 3 • eSATA/USB combo port x 1 • 5-in-1 memory card reader x 1
Built-in audio	• Stereo speakers • Built-in microphone
Keyboard	• 6-row Lenovo keyboard with integrated numeric keyboard (Z475) • 6-row Lenovo keyboard with separate numeric keyboard (Z575)
Ethernet chip	• RTL8111E (10/100/1000 Mbps) • RTL8105E (10/100 Mbps)
WLAN	• Atheros AR5B95 • Atheros AR5B97 • BCM943227HM4L • RT3090
Bluetooth	• BCM92070MD_REF
Integrated camera	• 0.3 Mega pixels CMOS • 2.0 Mega pixels CMOS
Battery pack	• Lithium-ion, 6 cells, 48Wh
AC adapter	• Input: 100 - 240 V , 50 - 60 Hz AC • Output: 20V DC, 3.25A (65W) 19V DC, 3.42A (65W) 20V DC, 4.5A (90W) • Power: 65W or 90W
Pre-installed operating system	• Windows 7 Starter EM (32-bit) • Windows 7 Home Basic (32-bit/64-bit) • Windows 7 Home Premium (32-bit/64-bit) • Windows 7 Professional (32-bit/64-bit) • Windows 7 Ultimate (32-bit/64-bit)

Status indicators

The system status indicators below show the computer status:

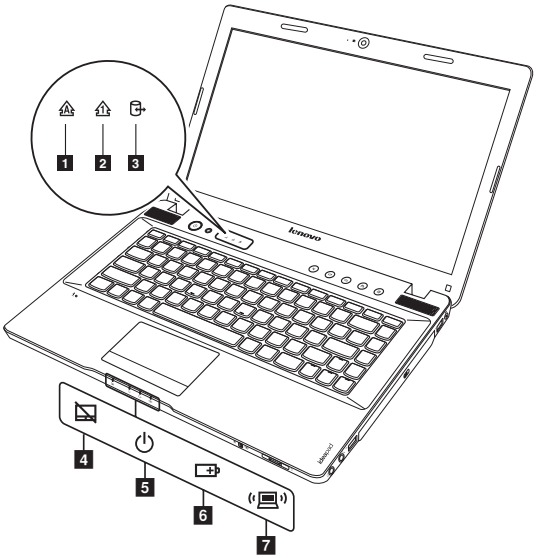

Table 2. Status indicators

Indicator	Meaning
1 Caps lock	**White:** Caps Lock mode is enabled. You can enter all alphabetic characters (A-Z) in uppercase without pressing the Shift key. To enable or disable Caps Lock mode, press the CapsLk key.
2 Num lock	**White:** The separate numeric keypad on the keyboard is enabled. To enable or disable the numeric keypad, press the Num Lock key.
3 Drive in use	**White:** Data is being read from or written to the hard disk drive, or the optical disk drive. When this indicator is on, do not put the computer into standby mode or turn off the computer. **Note:** Do not move the system while the white drive-in-use light is on. Sudden physical shock could cause drive errors.
4 Touchpad indicator	**White:** The touchpad is disabled.
5 Power on	**White:** System is enabled. **Blinking white:** System is in sleep mode. **off:** System is in hibernate mode or shut down.
6 Battery status	**Blinking amber:** (500ms off/1s on) The remaining power of the battery is less than 5% of its capacity. **Blinking amber:** (100ms off/3.2s on) The battery is being charged with the remaining power between 5% and 20% of its capacity. **Amber:** The computer is operating on battery power with the remaining power between 5% and 20% of its capacity. **Blinking white:** The battery is being charged with the remaining power between 20% and 80% of its capacity. **White:** The remaining power of the battery is more than 80% of its capacity, or the computer is operating on battery power with the remaining power between 20% and 80% of its capacity.
7 Wireless status	**White:** The wireless LAN radio is turned on and connected to AP. **Blinking white:** The wireless LAN is switched on and the radio of it is also turned off, or the wireless LAN radio is turned on and not connected to AP. **Flashing white:** The wireless LAN radio is turned on and data is being transmitted. **Off:** The wireless LAN is switched off and the radio of it is also turned off.

Fn key combinations

The following table shows the function of each combination of Fn with a function key.

Table 4. Fn key combinations

Key combination	Description
Fn + Esc:	Turn on/off the integrated camera.
Fn + F1:	Enter sleep mode.
Fn + F2:	Turn on/off the backlight of the LCD screen.
Fn + F3:	Open the interface for the display device switch to select this notebook or an external display.
Fn + F4:	Open the interface for display resolution settings.
Fn + F5:	Open the interface for integrated wireless devices settings (On/Off).
Fn + F6:	Enable/Disable the touchpad.
Fn + F8 (Z475):	Enable/Disable the numeric keypad.
Fn + F9:	Start/Pause playback of Windows Media Player.
Fn + F10:	Stop playback of Windows Media Player.
Fn + F11:	Skip to the previous track.
Fn + F12:	Skip to the next track.
Fn + Insert (Z575): Fn + PgUp (Z475):	Enable/Disable the scroll lock.
Fn + PrtSc:	Activate the system request.
Fn + Home:	Activate the pause function.
Fn + End:	Activate the break function.
Fn + PgDn (Z475):	Activate the insert function.
Fn + ↑/↓:	Increase/Decrease display brightness.
Fn + →/←:	Increase/Decrease sound volume.

FRU replacement notices

This section presents notices related to removing and replacing parts. Read this section carefully before replacing any FRU.

Screw notices

Loose screws can cause a reliability problem. In the Lenovo computer, this problem is addressed with special nylon-coated screws that have the following characteristics:

- They maintain tight connections.
- They do not easily come loose, even with shock or vibration.
- They are harder to tighten.
- Each one should be used only once.

Do the following when you service this machine:

- Keep the screw kit in your tool bag.
- Always use new screws.
- Use a torque screwdriver if you have one.

Tighten screws as follows:

- **Plastic to plastic**
  Turn an additional 90° after the screw head touches the surface of the plastic part:

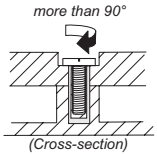

- **Logic card to plastic**
  Turn an additional 180° after the screw head touches the surface of the logic card:

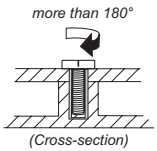

- **Torque driver**
  If you have a torque screwdriver , refer to the “Torque” column for each step.
- Make sure that you use the correct screws. If you have a torque screwdriver, tighten all screws firmly to the torque shown in the table. **Never use a screw that you removed. Use a new one. Make sure that all screws are tightened firmly**.
- Ensure torque screwdrivers are calibrated correctly following country specifications.

Removing and replacing an FRU

This section presents exploded figures with the instructions to indicate how to remove and replace the FRU. Make sure to observe the following general rules:

1. Do not attempt to service any computer unless you have been trained and certified. An untrained person runs the risk of damaging parts.
2. Before replacing any FRU, review "FRU replacement notices" on page 32.
3. Begin by removing any FRUs that have to be removed before the failing FRU. Any of such FRUs are listed at the top of the page. Remove them in the order in which they are listed.
4. Follow the correct sequence in the steps to remove the FRU, as given in the figures by the numbers in square callouts.
5. When turning a screw to replace an FRU, turn it in the direction as given by the arrow in the figure.
6. When removing the FRU, move it in the direction as given by the arrow in the figure.
7. To put the new FRU in place, reverse the removal procedures and follow any of the notes that pertain to replacement. For information about connecting and arranging internal cables, see "Locations" on page 73.
8. When replacing an FRU, use the correct screw as shown in the procedures.

⚠ DANGER

Before removing any FRU, turn off the computer, unplug all power cords from electrical outlets, remove the battery pack, and then disconnect any of the interconnecting cables.

Attention: After replacing an FRU, do not turn on the computer until you have made sure that all screws, springs, and other small parts are in place and none are loose inside the computer. Verify this by shaking the computer gently and listening for rattling sounds. Metallic parts or metal flakes can cause electrical short circuits.

Attention: The system board is sensitive to, and can be damaged by, electrostatic discharge. Before touching it, establish personal grounding by touching a ground point with one hand or using an electrostatic discharge (ESD) strap (P/N 6405959) to remove potential shock reasons.

Note:

The illustrations used in this section are of the Lenovo Z475, unless otherwise stated.

1010 Battery pack

> ⚠ **DANGER**
> Only use the battery specified in the parts list for your computer. Any other battery could ignite or explode.

Figure 1. Removal steps of battery pack

Unlock the manual battery latch **1**. Holding the spring-loaded battery latch in the unlocked position **2**, remove the battery pack in the direction shown by the arrow **3**.

Z475

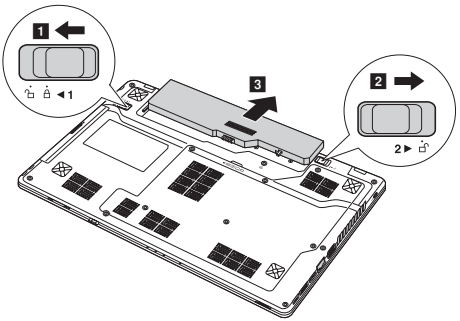

Z575

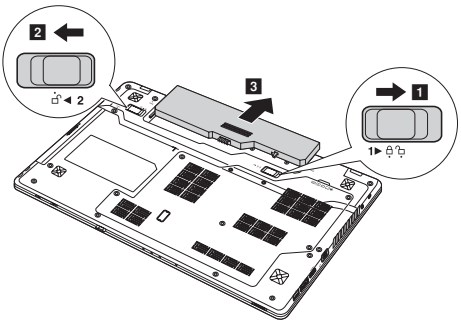

When installing: Install the battery pack along the slide rails of the slot. Then make sure that the battery release lever is in the locked position.

1020 Dummy card

For access, remove this FRU:

- "1010 Battery pack" on page 34

Figure 2. Removal steps of dummy cards

Remove the dummy card in the direction shown by arrows 1 2 .

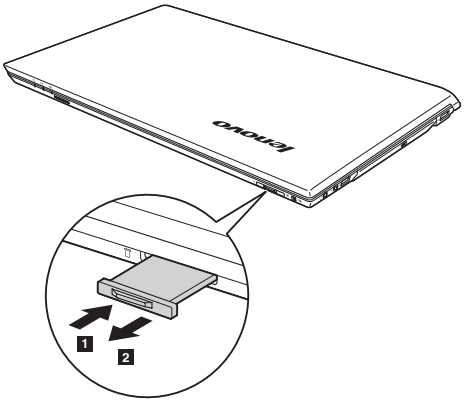

1030 Hard disk drive(HDD)/Memory/Mini PCI Express Card slot compartment cover

For access, remove this FRU:

- "1010 Battery pack" on page 34

Figure 3. Removal steps of HDD/Memory/Mini PCI Express Card slot compartment cover

Z475: Loosen six screws **1**, then remove the compartment cover **2**.

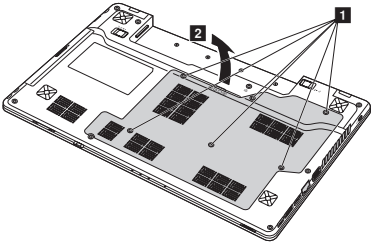

Z575: Loosen seven screws **1**, then remove the compartment cover **2**.

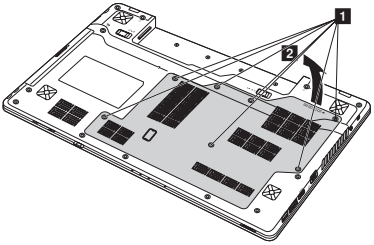

Step	Screw (quantity)	Color	Torque
1	M2.5 × 5 mm, mm, flat-head, nylok-coated (6) (Z475)	Black	2.5 kgfcm
	M2 × 4 mm, mm, flat-head, nylok-coated (7) (Z575)	Black	1.6 kgfcm

1040 Hard disk drive

For access, remove these FRUs in order:

- "1010 Battery pack" on page 34
- "1030 Hard disk drive(HDD)/Memory/Mini PCI Express Card slot compartment cover" on page 36

Attention:

- **Do not drop the hard disk drive or apply any physical shock to it.** The hard disk drive is sensitive to physical shock. Improper handling can cause damages and permanent loss of data.
- Before removing the drive, suggest the customer to backup all the information on it if possible.
- Never remove the drive while the system is operating or is in suspend mode.

Figure 4. Removal steps of hard disk drive

Z475: Remove two screws **1**, lift the hard disk drive, and then pull the tab in the direction shown by arrow **2** to remove the hard disk drive from the slot.

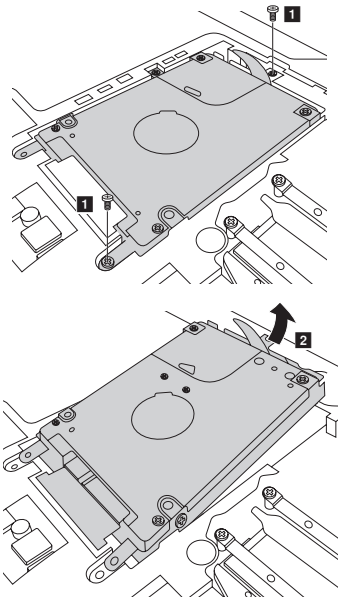

Z575: Remove the screw 1, then pull the tab in the direction shown by arrow 2 to remove the hard disk drive from the slot.

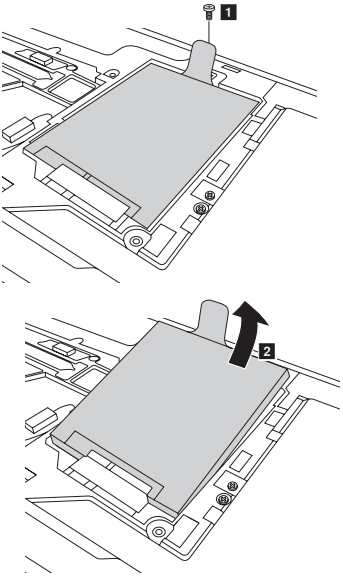

Step	Screw (quantity)	Color	Torque
1	M2.5 × 3.5 mm, flat-head, nylokcoated (2) (Z475)	Black	2.5 kgfcm
	M2 × 2 mm, flat-head, nylokcoated (1) (Z575)	Black	1.6 kgfcm

When installing: Make sure that the HDD connector is attached firmly.

1050 Optical drive

For access, remove this FRU:

- "1010 Battery pack" on page 34

Figure 5. Removal steps of optical drive

Remove the screw shown in the illustration **1**. Gently pull the optical drive out **2**.

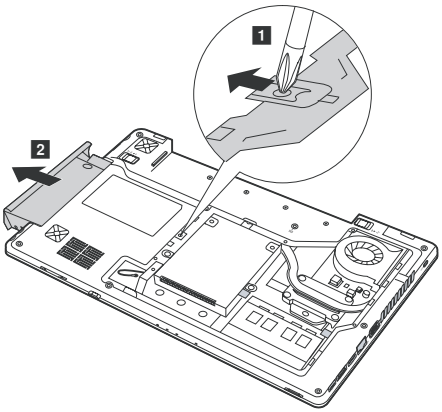

Step	Screw (quantity)	Color	Torque
1	M2 × 3 mm, flat-head, nylokcoated (1) (Z475)	Black	2.0 kgfcm
	M2 × 2.5 mm, flat-head, nylokcoated (1)(Z575)	Silver	1.6 kgfcm

1060 DIMM

For access, remove these FRUs in order:

- "1010 Battery pack" on page 34
- "1030 Hard disk drive(HDD)/Memory/Mini PCI Express Card slot compartment cover" on page 36

Figure 6. Removal steps of DIMM

Release the two latches on both edges of the socket at the same time in the direction shown by arrows 1, and then unplug the DIMM in the direction shown by arrow 2.

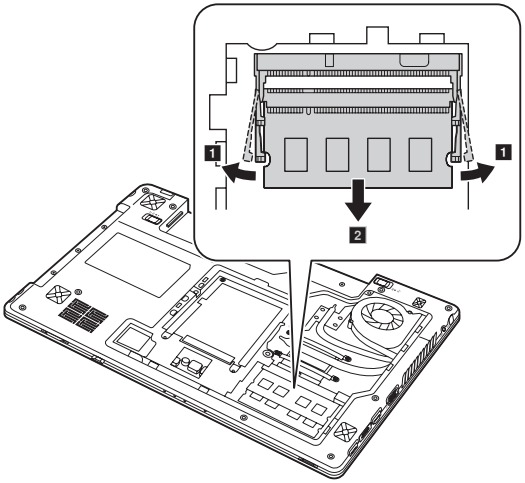

Note: If only one DIMM is used on the computer you are servicing, the card must be installed in SLOT-0 (a : lower slot), but not in SLOT-1 (b : upper slot).

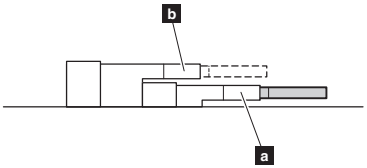

When installing: Insert the notched end of the DIMM into the socket. Push the DIMM firmly, and pivot it until it snaps into the place. Make sure that it is firmly fixed in the slot and difficult to be moved.

1070 PCI Express Mini Card for wireless LAN/WAN

For access, remove these FRUs in order:

- "1010 Battery pack" on page 34
- "1030 Hard disk drive(HDD)/Memory/Mini PCI Express Card slot compartment cover" on page 36

Figure 7. Removal steps of PCI Express Mini Card for wireless LAN/WAN

Disconnect the two wireless LAN cables (black, white) **1**, and then remove the screw **2**.

Z475

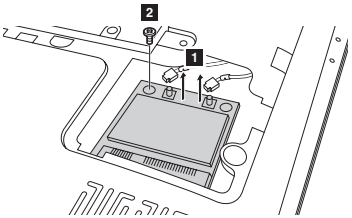

Z575

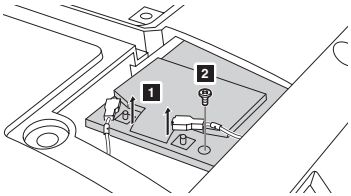

In step **1**, unplug the jacks by using the removal tool antenna RF connector (P/N: 08K7159), or pick up the connectors with your fingers and gently unplug them in the direction shown by arrows.

Notes: wireless LAN card has 2 cables in step **1**.
wireless LAN card in some models may have 3 cables in step **1**.

Step	Screw (quantity)	Color	Torque
2	M2 × 3 mm, flat-head, nylokcoated (1) (Z475)	Black	2.0 kgfcm
	M2 × 4 mm, flat-head, nylokcoated (1) (Z575)	Silver	1.6 kgfcm

Figure 7. Removal steps of PCI Express Mini Card for wireless LAN/WAN (continued)

Remove the card in the direction shown by arrow **3** .

Z475

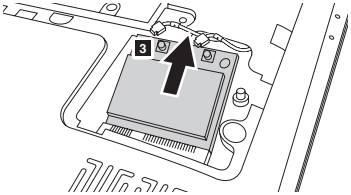

Z575

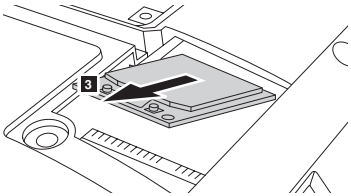

When installing:

- In models with a wireless LAN card that has two antenna connectors, plug the black cable (1st) (MAIN) into the jack labeled **1**, and the white cable (2nd) (AUX) into jack labeled **2** on the card.
- In models with a wireless LAN card that has three antenna connectors, plug the black cable (1st) (MAIN) into the jack labeled **1**, the grey cable (3rd) into jack labeled **3**, and the white cable (2nd) (AUX) into jack labeled **2** on the card.

1080 Keyboard

For access, remove this FRU:

- "1010 Battery pack" on page 34

Figure 8. Removal steps of keyboard

Z475: Remove two screws **1**.

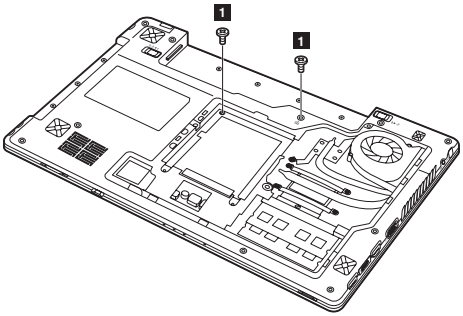

Z575: Remove Three screws **1**.

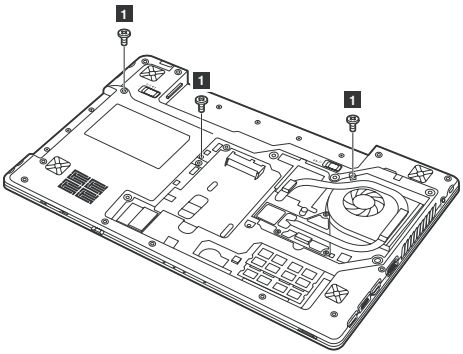

Step	Screw (quantity)	Color	Torque
1	M2.5 × 5 mm, flat-head, nylokcoated (2) (Z475)	Black	2.5 kgfcm
	M2.5 × 12 mm, flat-head, nylokcoated (3) (Z575)	Black	3.0 kgfcm

Figure 8. Removal steps of keyboard (continued)

Loosen the keyboard with fingers in the direction shown by arrows **2**.

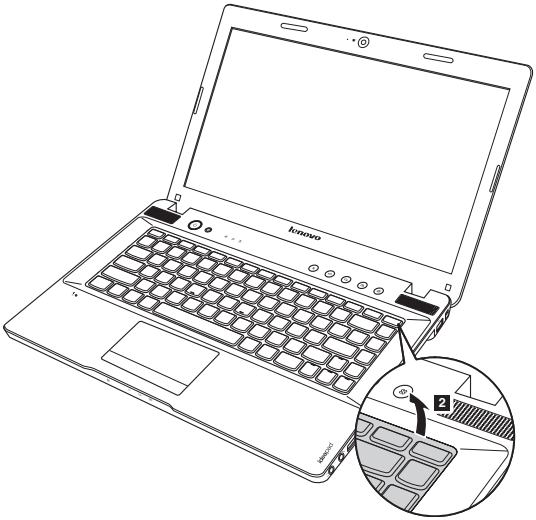

Lift the keyboard a little **3**, and then detach the connector in the direction shown by arrows **4** .

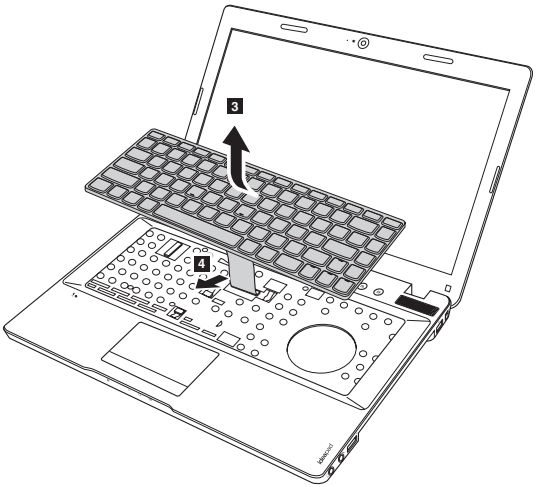

When installing: Make sure that the FPC connector is attached firmly.

1090 Keyboard bezel

For access, remove these FRUs in order:

- "1010 Battery pack" on page 34
- "1030 Hard disk drive(HDD)/Memory/Mini PCI Express Card slot compartment cover" on page 36
- "1050 Optical drive" on page 39
- "1080 Keyboard" on page 43

Figure 9. Removal steps of keyboard bezel

Z475: Remove ten screws 1 and three screws 2 on the bottom.

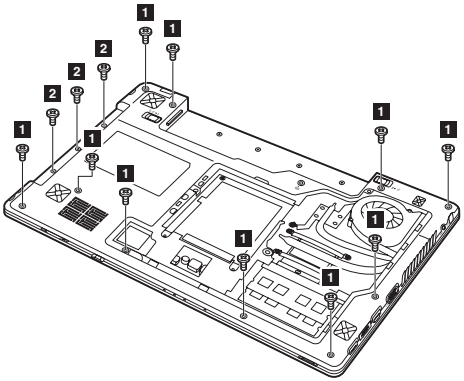

Z575: Remove eleven screws 1 and three screws 2 on the bottom.

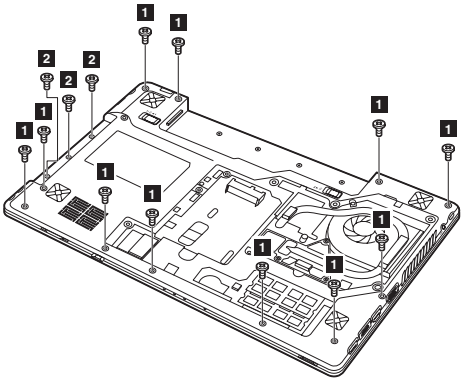

Step	Screw (quantity)	Color	Torque
1	M2.5 × 5 mm, flat-head, nylokcoated (10) (Z475)	Black	2.5 kgfcm
	M2.5 × 7 mm, flat-head, nylokcoated (11) (Z575)	Black	3.0 kgfcm
2	M2 × 2 mm, flat-head, nylokcoated (3) (Z475)	Black	2.0 kgfcm
	M2 × 2 mm, flat-head, nylokcoated (3) (Z575)	Black	1.6 kgfcm

Figure 9. Removal steps of keyboard bezel (continued)

Z475: Remove four screws **3** .

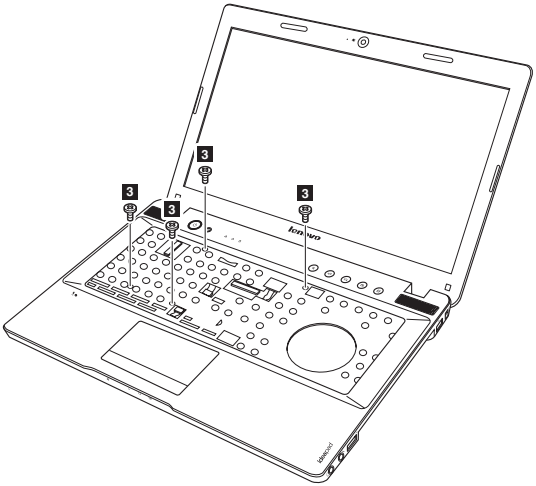

Z575: Remove two screws **3** .

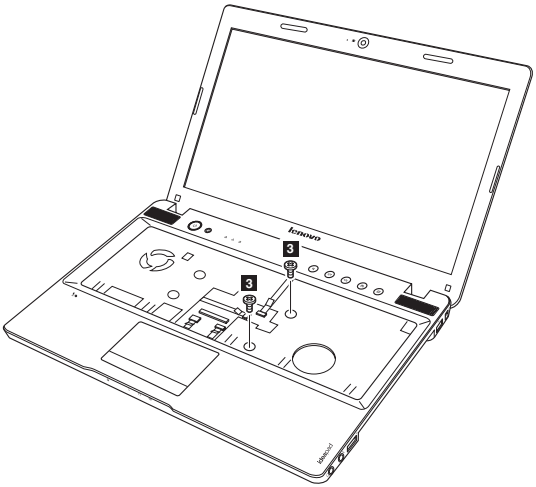

Step	Screw (quantity)	Color	Torque
3	M2.5 × 5 mm, flat-head, nylokcoated (4) (Z475)	Black	2.5 kgfcm
	M2.5 × 7 mm, flat-head, nylokcoated (2) (Z575)	Black	3.0 kgfcm

Figure 9. Removal steps of keyboard bezel (continued)

Z475:

Detach three FPC connectors in the direction shown by arrows 4 5 . Unplug the LCD connector in the direction shown by arrow 6 and two microphone connectors in the direction shown by arrow 7 .

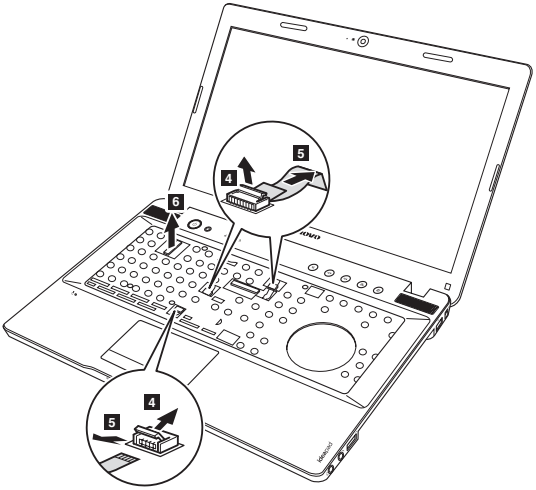

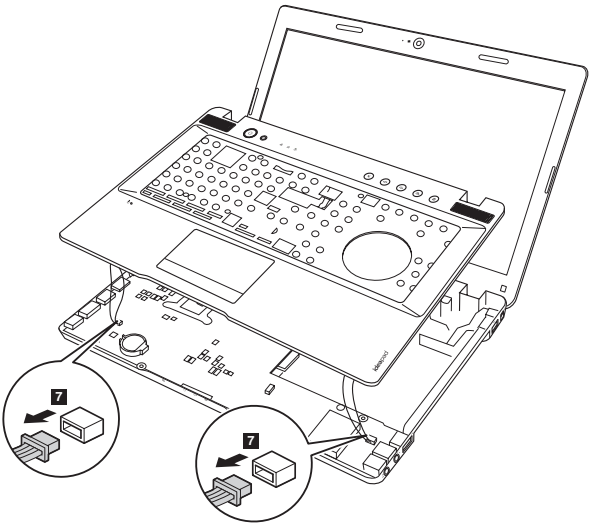

Z575:

Detach three FPC connectors in the direction shown by arrows 4 5 . Unplug the microphone connector in the direction shown by arrow 6 .

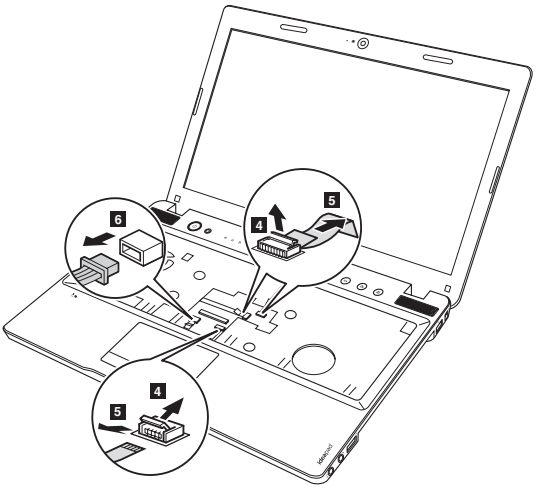

When installing: Make sure that all the FPC connectors, microphone connectors and LCD connector are attached firmly.

Figure 9. Removal steps of keyboard bezel (continued)

Remove the keyboard bezel in the direction shown by arrow **8**.

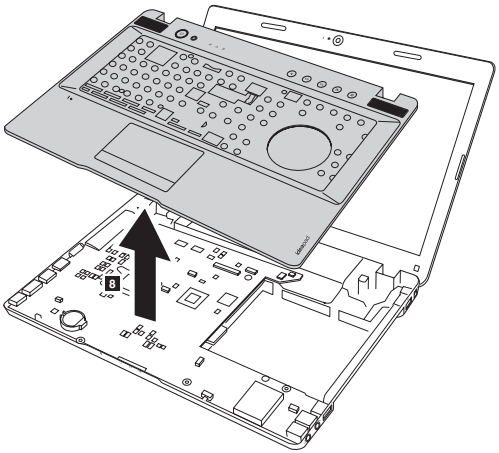

Z475: Loosen four screws **9** to remove the speakers, then loosen the screw **10**, and pull the power board right to remove it **11**.

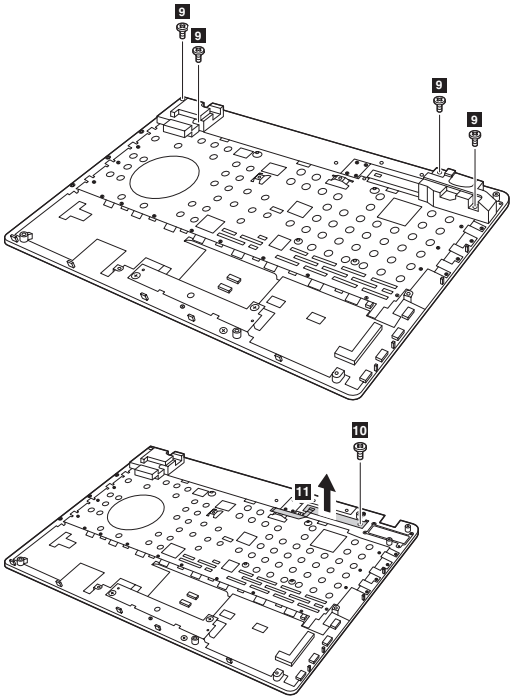

Z575: Loosen two screws 10, and then remove the power board 11 .

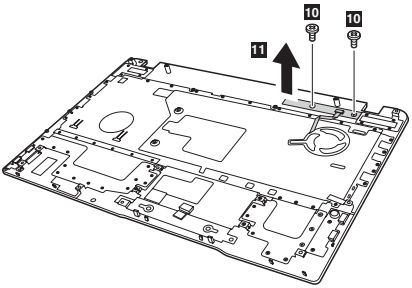

Step	Screw (quantity)	Color	Torque
9	M2 × 2.5 mm, flat-head, nylokcoated (4) (Z475)	Silver	2.0 kgfcm
10	M2.5 × 3.5 mm, flat-head, nylokcoated (1) (Z475)	Black	2.0 kgfcm
	M2 × 2.5 mm, flat-head, nylokcoated (2) (Z575)	Black	1.6 kgfcm

1100 System board

Important notices for handling the system board:

When handling the system board, bear the following in mind.

- Be careful not to drop the system board on a bench top that has a hard surface, such as metal, wood, or composite.
- Avoid rough handling of any kind.
- In the whole process, make sure not to drop or stack the system board.
- If you put a system board down, make sure to put it only on a padded surface such as an ESD mat or conductive corrugated material.

For access, remove these FRUs in order:

- "1010 Battery pack" on page 34
- "1020 Dummy card" on page 35
- "1030 Hard disk drive(HDD)/Memory/Mini PCI Express Card slot compartment cover" on page 36
- "1040 Hard disk drive" on page 37
- "1050 Optical drive" on page 39
- "1060 DIMM" on page 40
- "1070 PCI Express Mini Card for wireless LAN/WAN" on page 41
- "1080 Keyboard" on page 43
- "1090 Keyboard bezel" on page 45

Figure 10. Removal steps of system board

Z475: Remove three screws **1**. Unplug the microphone connector in the direction shown by arrow **2**.

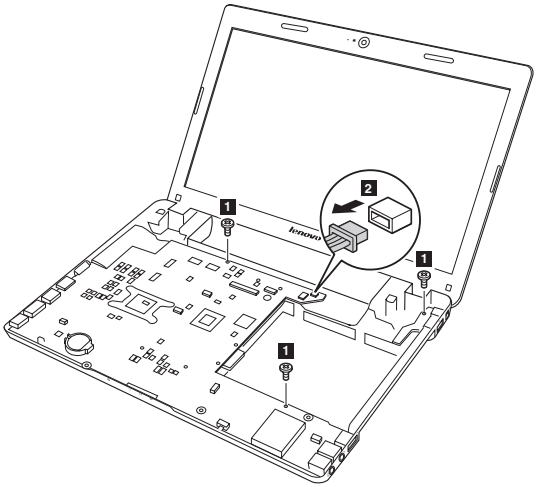

Z575: Remove five screws **1**. Unplug four microphone connectors in the direction shown by arrow **2**.

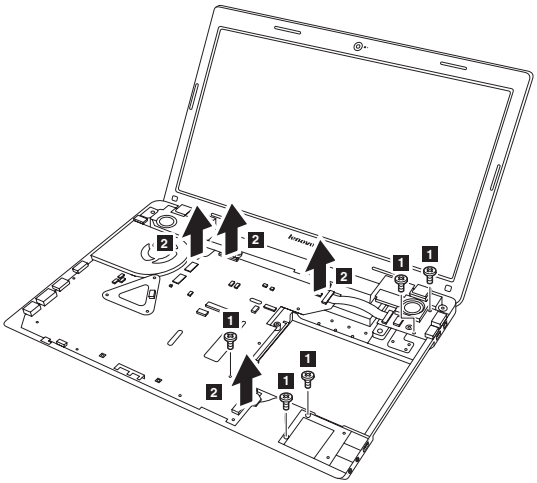

When installing: Make sure that all the connectors are attached firmly.

Step	Screw (quantity)	Color	Torque
1	M2.5 × 5 mm, flat-head, nylok-coated (3) (Z475)	Black	2.5 kgfcm
	M2 × 7 mm, flat-head, nylok-coated (5) (Z575)	Black	3.0 kgfcm

Figure 10. Removal steps of system board (continued)

Remove the system board in the direction shown by arrow 3.

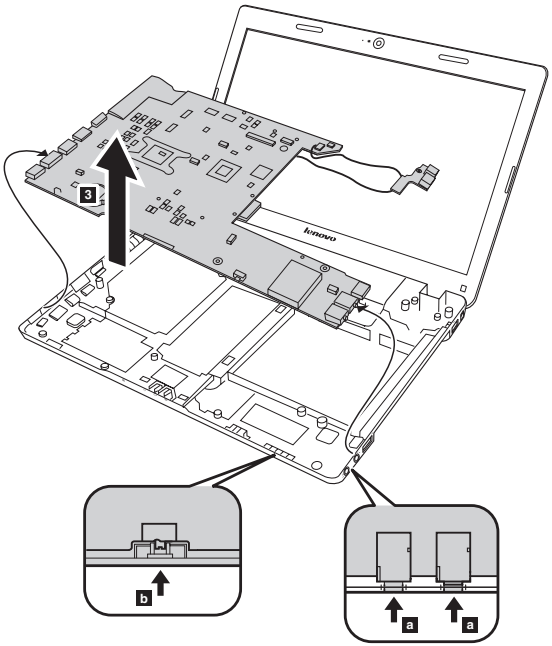

When installing: When attaching the system board to the base cover, adjust the placement of the wireless radio switch as shown in b, and make sure that both of the audio jack and the microphone jack are attached to the holes on the base cover as shown in a. Improper placement of the switch or those jacks might cause a damage.

1110 LCD unit

For access, remove these FRUs in order:

- “1010 Battery pack” on page 34
- “1020 Dummy card” on page 35
- “1030 Hard disk drive(HDD)/Memory/Mini PCI Express Card slot compartment cover” on page 36
- “1040 Hard disk drive” on page 37
- “1050 Optical drive” on page 39
- “1060 DIMM” on page 40
- “1070 PCI Express Mini Card for wireless LAN/WAN” on page 41
- “1080 Keyboard” on page 43
- “1090 Keyboard bezel” on page 45
- “1100 System board” on page 52

Figure 11. Removal steps of LCD unit

Release the antenna cables from the cable guides in the direction shown by arrows **1**. Remove four screws **2**.

Z475:

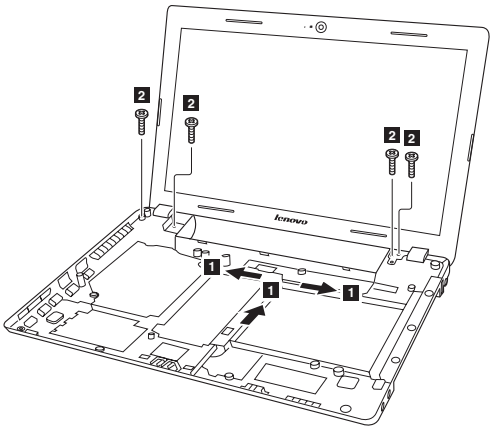

Z575:

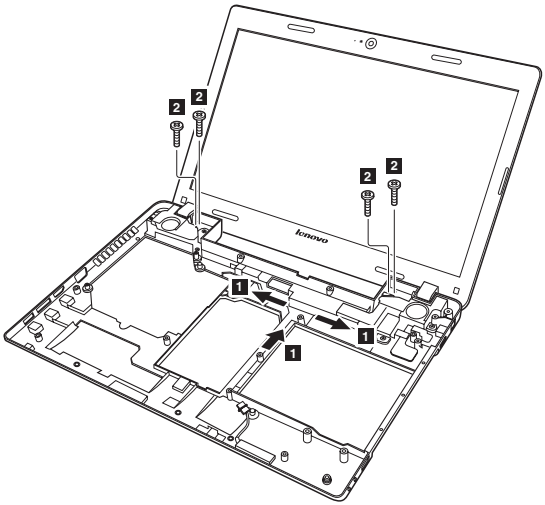

Step	Screw (quantity)	Color	Torque
2	M2 × 5 mm, flat-head, nylokcoated (4) (Z475)	Silver	2.0 kgfcm
	M2.5 × 4 mm, flat-head, nylokcoated (4) (Z575)	Silver	3.0 kgfcm

When installing:

- Route the antenna cables along the cable guides. As you route the cables, make sure that they are not subjected to any tension. Tension could cause the cables to be damaged by the cable guides, or a wire to be broken.
- Make sure that the LCD connector is attached firmly and make sure that you do not pinch the antenna cables when you attach the LCD assembly. Route the LCD cable along the cable guides.

Figure 11. Removal steps of LCD unit (continued)

Remove the LCD unit in the direction shown by arrows **3**.

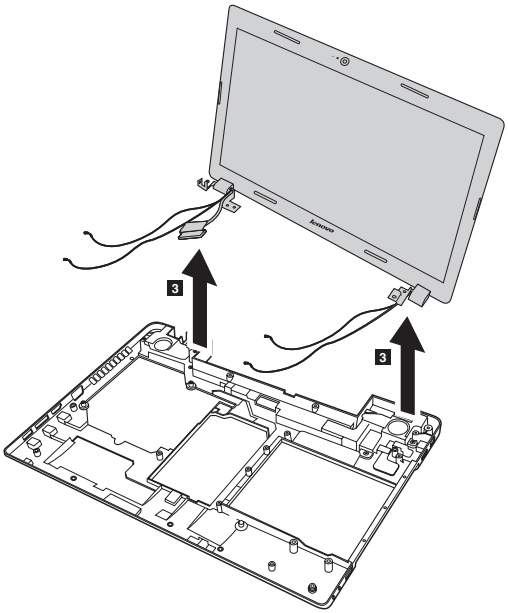

1120 Fan assembly and Heat Sink assembly

For access, remove these FRUs in order:

- "1010 Battery pack" on page 34
- "1020 Dummy card" on page 35
- "1030 Hard disk drive(HDD)/Memory/Mini PCI Express Card slot compartment cover" on page 36
- "1040 Hard disk drive" on page 37
- "1050 Optical drive" on page 39
- "1060 DIMM" on page 40
- "1070 PCI Express Mini Card for wireless LAN/WAN" on page 41
- "1080 Keyboard" on page 43
- "1090 Keyboard bezel" on page 45
- "1100 System board" on page 52

Figure 12. Removal steps of fan assembly and heat sink assembly

Detach the fan connector in the direction shown by arrow **1**.

Z475

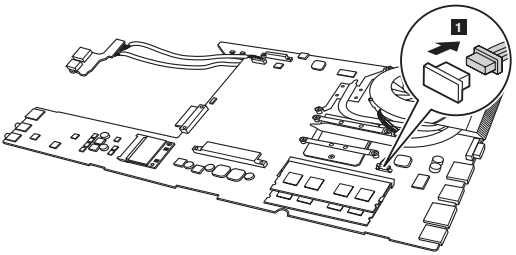

Z575

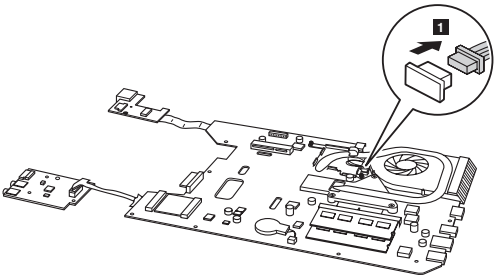

When installing: Make sure that the fan connector is attached firmly to the system board.

Figure 12. Removal steps of fan assembly and heat sink assembly (continued)

Z475: Loosen six screws **2**.

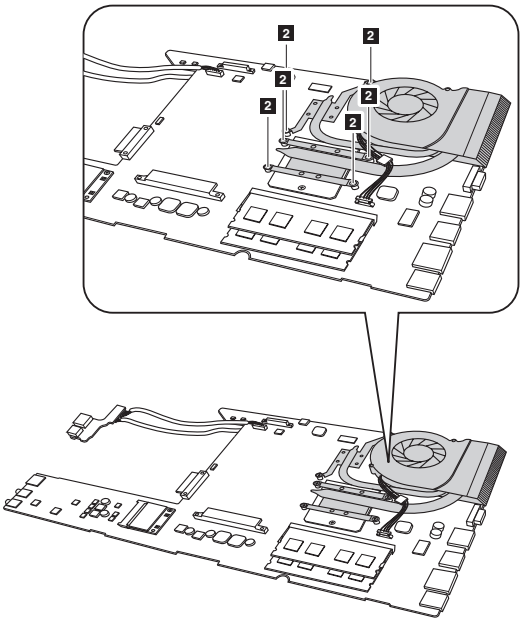

Z575: Loosen five screws **2**.

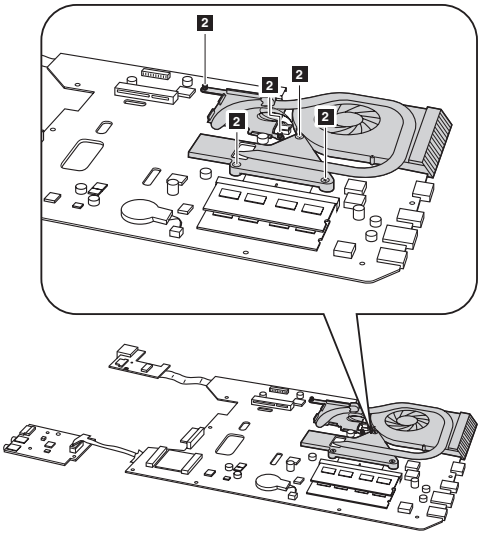

Lift the fan assembly and heat sink assembly in the direction shown by arrow **3**. Be careful not to damage the connector.

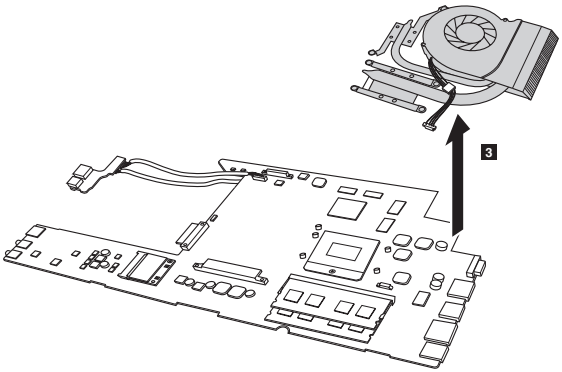

1130 CPU

For access, remove these FRUs in order:

- “1010 Battery pack” on page 34
- “1020 Dummy card” on page 35
- “1030 Hard disk drive(HDD)/Memory/Mini PCI Express Card slot compartment cover” on page 36
- “1040 Hard disk drive” on page 37
- “1050 Optical drive” on page 39
- “1060 DIMM” on page 40
- “1070 PCI Express Mini Card for wireless LAN/WAN” on page 41
- “1080 Keyboard” on page 43
- “1090 Keyboard bezel” on page 45
- “1100 System board” on page 52
- “1120 Fan assembly and Heat Sink assembly” on page 58

Attention: CPU is extremely sensitive. When you service the CPU, avoid any kind of rough handling.

Figure 13. Removal steps of CPU

Rotate the head of the screw in the direction shown by arrow **1** to release the lock, then remove the CPU in the direction shown by arrow **2**.

Z475

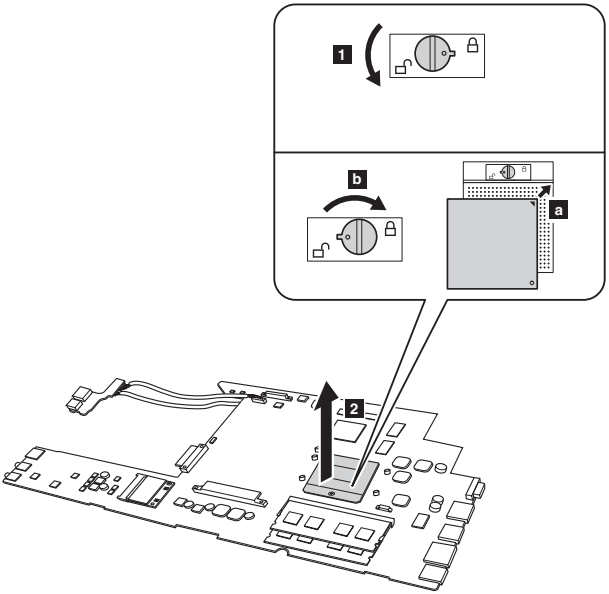

Z575

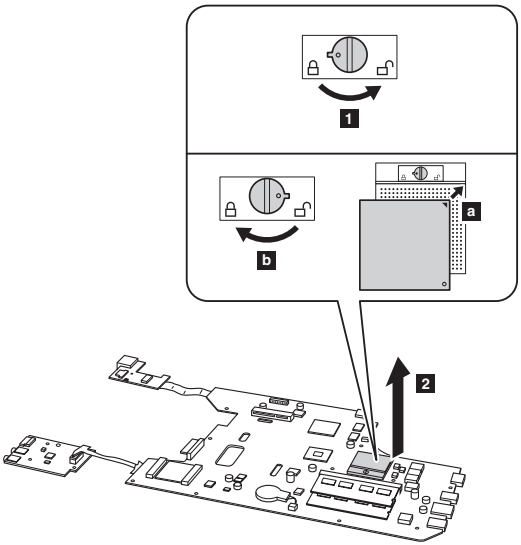

When installing: Place the CPU on the CPU socket in the direction shown by arrow a, and then rotate the head of the screw in the direction shown by arrow b to secure the CPU.

1140 Base cover, speakers and bluetooth card

For access, remove these FRUs in order:

- "1010 Battery pack" on page 34
- "1020 Dummy card" on page 35
- "1030 Hard disk drive(HDD)/Memory/Mini PCI Express Card slot compartment cover" on page 36
- "1040 Hard disk drive" on page 37
- "1050 Optical drive" on page 39
- "1060 DIMM" on page 40
- "1070 PCI Express Mini Card for wireless LAN/WAN" on page 41
- "1080 Keyboard" on page 43
- "1090 Keyboard bezel" on page 45
- "1110 LCD unit" on page 55
- "1100 System board" on page 52

Figure 14. Removal steps of base cover, speakers and bluetooth card

Z575: Remove two screws 1 and then remove rhe power assembly in the direction shown by arrow 2.

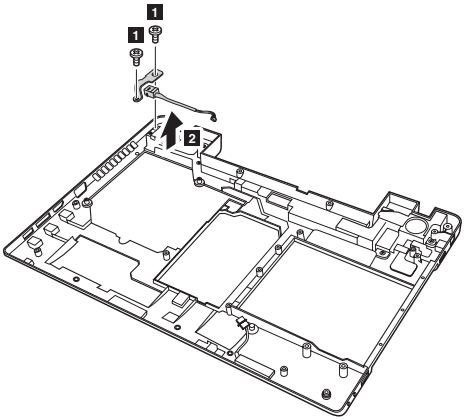

When installing: Make sure that the power connector is attached firmly.

Step	Screw (quantity)	Color	Torque
1	M2 × 2.5 mm, flat-head, nylok-coated (2)	Black	1.6 kgfcm

Figure 14. Removal steps of base cover, speakers and bluetooth card (continued)

Z575: Remove six screws 3, and then remove the speakers in the direction shown by arrows 4.

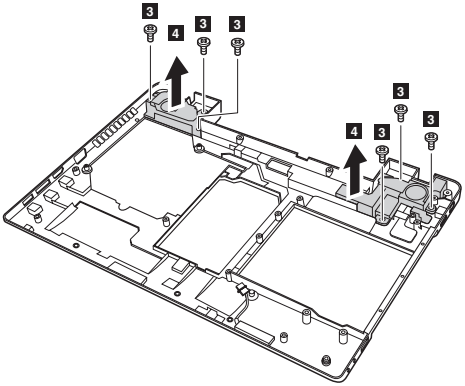

Step	Screw (quantity)	Color	Torque
3	M2.5 × 2.5 mm, flat-head, nylok-coated (6)	Black	3.0 kgfcm

Remove the bluetooth card in the direction shown by arrow 5.

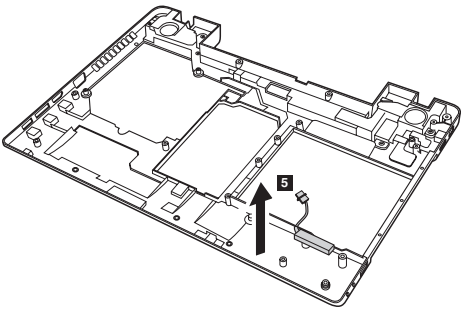

Note: Applying labels to the base cover (Z475)

The new base cover FRU is shipped with a kit containing labels of several kinds. When you replace the base cover, you need to apply the following label:

The following labels need to be peeled off from the old base cover, and need to be put on the new base cover.

- a Rating label
- b COA label
- c MTM&PRC label
- d WLAN homologation label
- e Bluetooth homologation label
- f Israel label
- g Indonesia D side label
- h Korea KCC label

For some models, you also need to apply one or two FCC labels. Check the old base cover; if it has one or two FCC labels, find duplicates of them in the label kit and apply them to the new base cover.

For the location of each label, refer to the following figure:

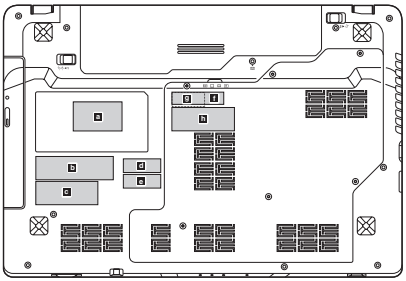

Note: Applying labels to the base cover (Z575)

The new base cover FRU is shipped with a kit containing labels of several kinds. When you replace the base cover, you need to apply the following label:

The following labels need to be peeled off from the old base cover, and need to be put on the new base cover.

- a Rating label
- b COA label
- c PRC/MTM Label or KCC label
- d Indonesia D side label
- e WLAN homologation label
- f Bluetooth homologation label

For some models, you also need to apply one or two FCC labels. Check the old base cover; if it has one or two FCC labels, find duplicates of them in the label kit and apply them to the new base cover.

For the location of each label, refer to the following figure:

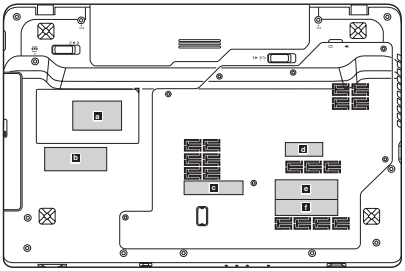

1150 LCD front bezel

For access, remove these FRUs in order:

- “1010 Battery pack” on page 34
- “1020 Dummy card” on page 35
- “1030 Hard disk drive(HDD)/Memory/Mini PCI Express Card slot compartment cover” on page 36
- “1040 Hard disk drive” on page 37
- “1050 Optical drive” on page 39
- “1060 DIMM” on page 40
- “1070 PCI Express Mini Card for wireless LAN/WAN” on page 41
- “1080 Keyboard” on page 43
- “1090 Keyboard bezel” on page 45
- “1100 System board” on page 52
- “1110 LCD unit” on page 55

Figure 15. Removal steps of LCD front bezel

Remove two screws **1**.

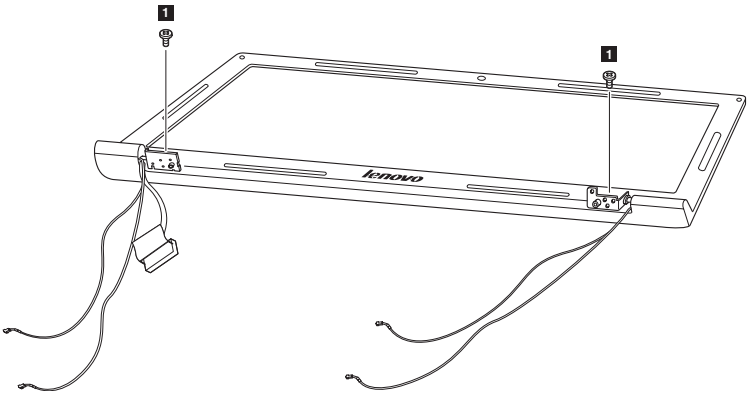

Step	Screw (quantity)	Color	Torque
1	M2.0 × 4 mm, flat-head, nylok-coated (2)	Black	2.0 kgfcm

Remove the LCD front bezel in the direction shown by arrows **2**.

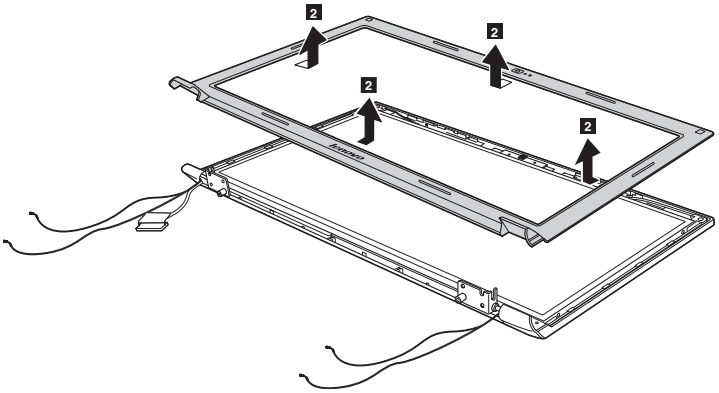

1160 LCD panel, LCD cable and hinges

For access, remove these FRUs in order:

- "1010 Battery pack" on page 34
- "1020 Dummy card" on page 35
- "1030 Hard disk drive(HDD)/Memory/Mini PCI Express Card slot compartment cover" on page 36
- "1040 Hard disk drive" on page 37
- "1050 Optical drive" on page 39
- "1060 DIMM" on page 40
- "1070 PCI Express Mini Card for wireless LAN/WAN" on page 41
- "1080 Keyboard" on page 43
- "1090 Keyboard bezel" on page 45
- "1100 System board" on page 52
- "1110 LCD unit" on page 55
- "1150 LCD front bezel" on page 67

Figure 16. Removal steps of LCD panel, LCD cable and hinges

Remove six screws 1. Remove the integrated camera connector in the direction shown by arrow 2. Lift the LCD panel with the hinges in the direction shown by arrows 3.

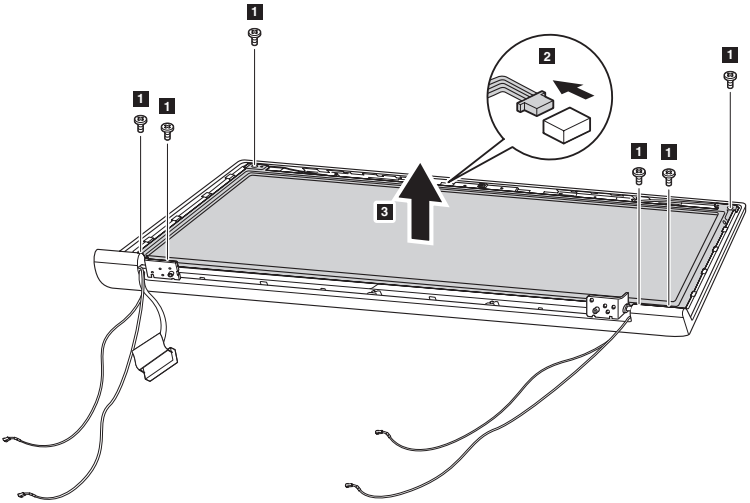

When installing: Make sure that the connector is attached firmly.

Step	Screw (quantity)	Color	Torque
1	M2.5 × 3.5 mm, flat-head, nylokcoated (6) (Z475)	Silver	2.5 kgfcm
	M2.5 × 4 mm, flat-head, nylokcoated (6) (Z575)	Silver	3.0 kgfcm

Figure 16. Removal steps of LCD panel, LCD cable and hinges (continued)

Remove four screws 4 and remove the hinges in the direction shown by arrows 5.

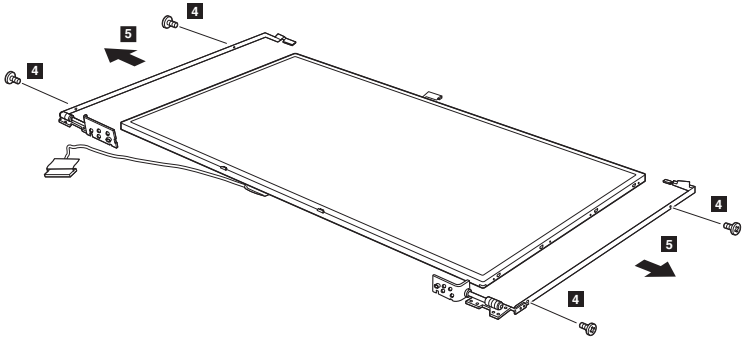

Step	Screw (quantity)	Color	Torque
4	M2.5 × 5 mm, flat-head, nylokcoated (4) (Z475)	Black	2.5 kgfcm
	M2.5 × 3 mm, flat-head, nylokcoated (4) (Z575)	Black	3.0 kgfcm

Note: The LCD cables are attached to the LCD panel by a metal connector.

Peel off the adhesive tape and detach the connector in the direction shown by arrow 6.

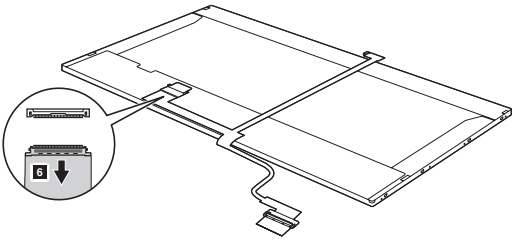

When installing: Make sure that the metal connector is attached firmly.

1170 Integrated camera

For access, remove these FRUs in order:

- “1010 Battery pack” on page 34
- “1020 Dummy card” on page 35
- “1030 Hard disk drive(HDD)/Memory/Mini PCI Express Card slot compartment cover” on page 36
- “1040 Hard disk drive” on page 37
- “1050 Optical drive” on page 39
- “1060 DIMM” on page 40
- “1070 PCI Express Mini Card for wireless LAN/WAN” on page 41
- “1080 Keyboard” on page 43
- “1090 Keyboard bezel” on page 45
- “1100 System board” on page 52
- “1110 LCD unit” on page 55
- “1150 LCD front bezel” on page 67
- “1160 LCD panel, LCD cable and hinges” on page 69

Figure 17. Removal steps of integrated camera

Note: The integrated camera is stuck on the top center of the LCD cover.

Remove the integrated camera from the LCD cover **1**.

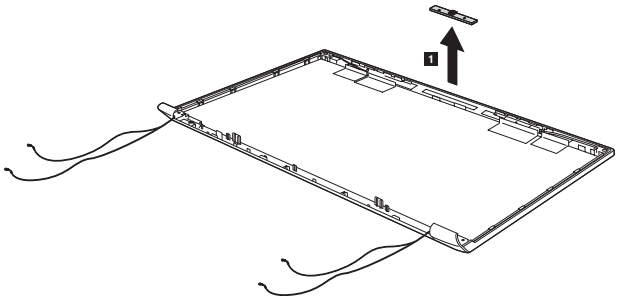

When installing: Stick the integrated camera to the top center of the LCD cover and ajust the placement of it to make sure the connector is attached firmly.

1180 Antenna assembly and LCD cover

For access, remove these FRUs in order:

- "1010 Battery pack" on page 34
- "1020 Dummy card" on page 35
- "1030 Hard disk drive(HDD)/Memory/Mini PCI Express Card slot compartment cover" on page 36
- "1040 Hard disk drive" on page 37
- "1050 Optical drive" on page 39
- "1060 DIMM" on page 40
- "1070 PCI Express Mini Card for wireless LAN/WAN" on page 41
- "1080 Keyboard" on page 43
- "1090 Keyboard bezel" on page 45
- "1100 System board" on page 52
- "1110 LCD unit" on page 55
- "1150 LCD front bezel" on page 67
- "1160 LCD panel, LCD cable and hinges" on page 69

Figure 18. Removal steps of antenna assembly and LCD cover

Peel off the adhesive tapes securing the antenna boards, release the cables from the cable guide, and then remove the antenna assembly in the direction shown by arrows **1**.

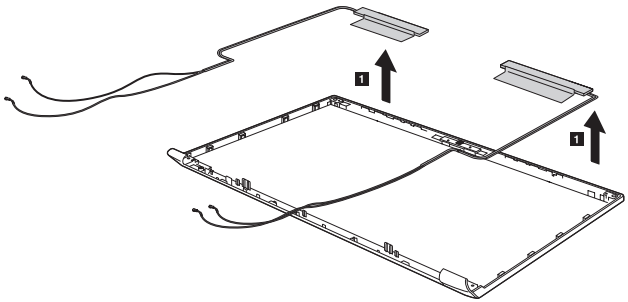

When installing: Route the antenna cables along the cable guides and secure the antenna boards with adhesive tapes. As you route the cables, make sure that they are not subjected to any tension. Tension could cause the cables to be damaged by the cable guides, or a wire to be broken.

Locations

Front view

1 Integrated camera
2 Wireless module antennas
3 Computer display
4 Speakers
5 Power button
6 OneKey Rescue System button
7 System status indicators
8 Built-in microphone
9 Touchpad
10 Integrated wireless device switch

Note: For the description of each indicator, see “Status indicators” on page 29.

11 Memory card slot
12 Thermal management button
13 OneKey Theater button
14 Volume buttons

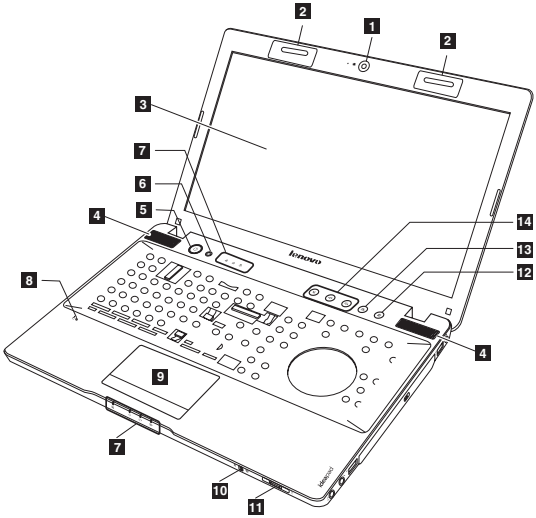

Right-side view

1. Headphone jack
2. Microphone jack
3. Optical drive
4. USB port
5. AC power adapter jack
6. RJ-45 port

Z475:

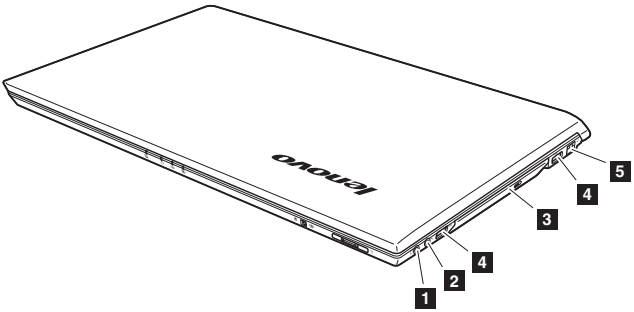

Z575:

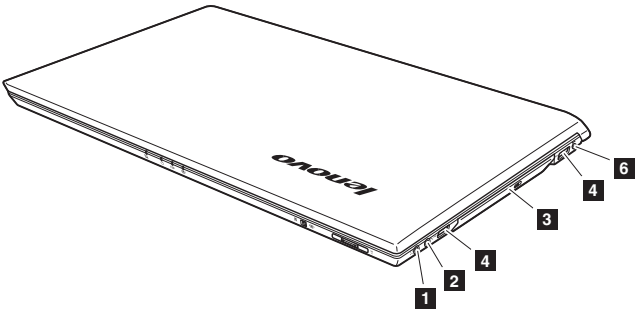

Bottom and Left-side view

1. Kensington slot
2. AC power adapter jack
3. Fan louvers
4. VGA port
5. RJ-45 port
6. HDMI port
7. eSATA/USB combo port
8. USB Port
9. Battery latch - manual
10. Battery pack
11. Battery latch - spring loaded
12. Hard disk drive (HDD)/Memory/Mini PCI Express Card slot compartment

Z475:

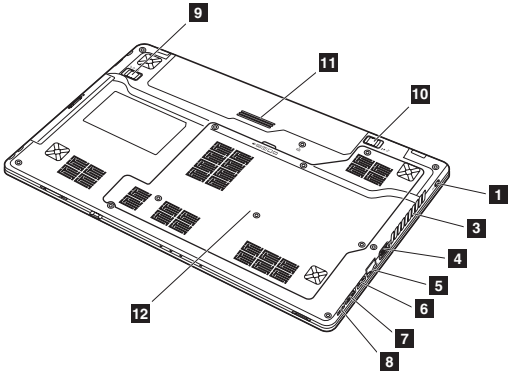

Z575:

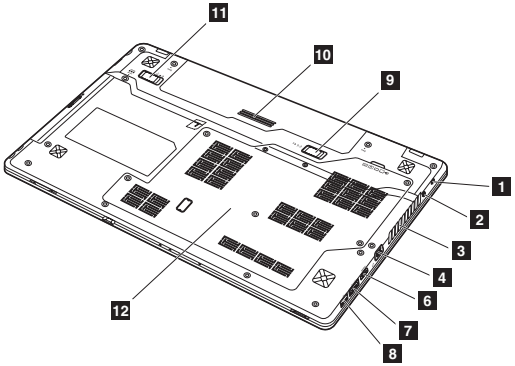

Parts list

This section presents the following service parts:

- "Overall" on page 77
- "LCD FRUs" on page 82
- "Keyboard" on page 84
- "Miscellaneous parts" on page 94
- "AC adapters" on page 95
- "Power cords" on page 96

Notes:

- Each FRU is available for all types or models, unless specific types or models are specified.

Overall

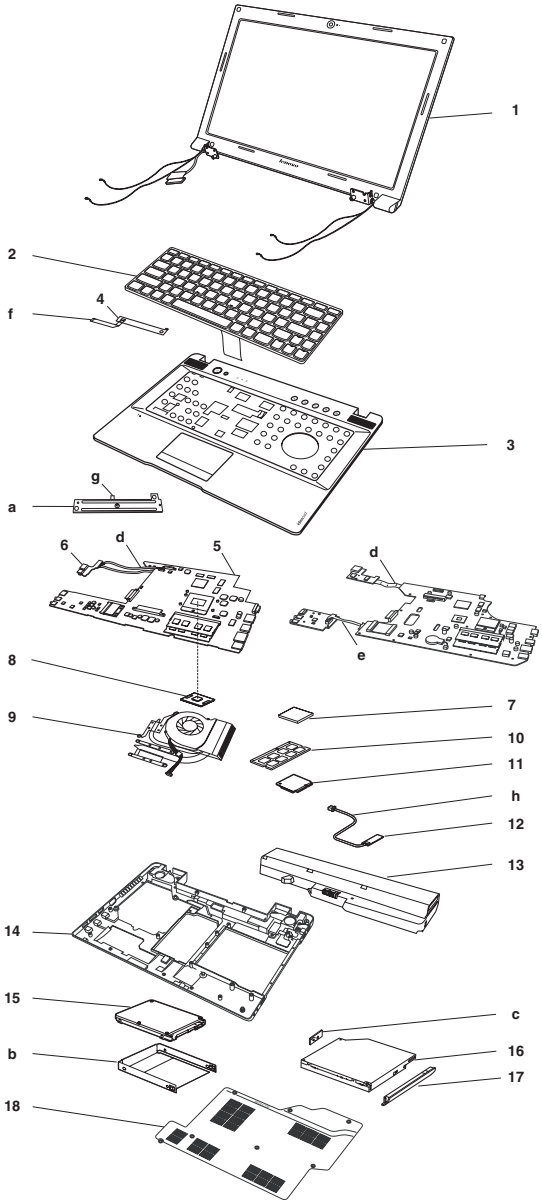

Table 5. Parts list—Overall

No.	FRU	FRU No.
1	LCD unit (see “LCD FRUs” on page 82.)	
2	Keyboard (see “Keyboard” on page 84.)	
3	KL6B TOP CASE GUN METAL (Z475)	31051209
3	LZ57 TOP CASE GUN-METAL W/MIC (Z575)	31050913
4	LZ57 POWER BOARD (Z575)	11013371
5	KL6B MB UMA WLAN W/BT/HDMI (Z475)	11013801
5	KL6C MB DIS-512M WLAN W/BT/HDMI (Z475)	11013802
5	KL6C MB DIS-1G WLAN W/BT/HDMI (Z475)	11013803
5	LZ575 MB UMA W/BT/HDMI/WLAN (Z575)	11013820
5	LZ575 MB DIS 2G W/BT/HDMI/WLAN (Z575)	11013821
6	KL6 DC IN/USB BOARD ASSY (Z475)	11013383
7	KL6 SD DUMMY CARD (Z475)	31049442
7	LZ57 SD DUMMY CARD (Z575)	31049305
8	AMD A8-3500M 2.4G/1.5G 4M 4C B0 PGA CPU	102500012
8	AMD A6-3400M 2.3G/1.4G 4M 4C B0 PGA CPU	102500013
8	AMD A4-3300M 2.5G/1.9G 2M 2C B0 PGA CPU	102500014
8	AMD E2-3000M 2.4G/1.8G 1M 2C B0 PGA CPU	102500060
9	KL6B THERMAL MODULE UMA W/FAN 35W (Z475)	31051207
9	KL6C THERMAL MODULE DIS W/FAN 35W (Z475)	31051208
9	LZ575 HEATSINK UMA W/FAN (Z575)	31051029
9	LZ575 HEATSINK DIS W/FAN (Z575)	31051030
10	DDRIII 1333 1GB, M471B2873GB0-CH9 (Rev G/1GB/35nm)	11013084
10	DDRIII 1333 1GB, HMT312S6BFR6C-H9 N0 (Rev Vega/2GB/44nm)	11012321
10	DDRIII 1333 2GB, M471B5773DH0-CH9 (Rev D/2GB/35nm)	11012808
10	DDRIII 1333 2GB, HMT325S6BFR8C-H9 N0 (Rev Vega/2GB/44nm)	11012197
10	DDRIII 1333 2GB, RMT3010EC58E8F-1333 (C/2GB/40nm)	11200060
10	DDRIII 1333 2GB, RMT3010KC58E8F-1333 (Samsung C/2GB/46nm)	11013171
10	DDRIII 1333 2GB, EBJ20UF8BCS0-DJ-F (C/2GB/40nm)	11013400
10	DDRIII 1333 2GB, NT2GC64B88B0NS-CG (V69A/2GB/50nm)	11012761
10	DDRIII 1333 4GB, M471B5273DH0-CH9 (Rev D /2GB/35nm)	11012807
10	DDRIII 1333 4GB, RMT3020EC58E9F-1333 (C/2GB/40nm)	11200061
10	DDRIII 1333 4GB, HMT351S6BFR8C-H9 N0 (Rev Vega/2GB/44nm)	11012199
10	DDRIII 1333 4GB, EBJ41UF8BCS0-DJ-F (Rev C/2GB/40nm)	11012945

Table 5. Parts list—Overall (continued)

No.	FRU	FRU No.
11	WLAN card, WiFi 1x1 BGN, ICbt RT3090 MOW M PCIE NB HMC	20002515
11	WLAN card, WiFi 1x1 BGN, Liteon AR9285 HB95 BGN MOW NB	20002357
11	WLAN card, WiFi 2x2 BGN, Liteon HB97 MOW M PCIE NB HMC	20002525
11	WLAN card, WiFi 2x2 BGN, Liteon HB97 MOW M PCIE NB HMC	20002506
12	Bluetooth card, BT2.1&BT3.0, Fcn BCM92070 BT2.1 EDR Flash U NB	20002266
12	Bluetooth card, BT2.1&BT3.0, USI BCM92070 BT2.1 EDR Flash U NB	20002326
13	Battery pack, Sanyo L09S6Y02 3S2P 48Wh	121001091
13	Battery pack, LG L09L6Y02 3S2P 48Wh (Z475)	121001089
13	Battery pack, Pana L10P6Y22 3S2P 48Wh (Z575)	121001096
13	Battery pack, Pana L10P6Y22 3S2P 48Wh (Z575)	121001150
13	Battery pack, SMP/LG L09M6Y02 3S2P 48Wh	121001094
13	Battery pack, Celx/S L10C6Y02 3S2P 48Wh	121001071
14	KL6 BOTTOM CASE UMA ASSY (Z475)	31049439
14	LZ57 LOWER CASE UMA W/SPK&DC-IN CABLE (Z575)	31049311
15	Hard disk drive, 250G 5400rpm SATA, WD2500BPVT-24ZEST0 5400RPM 250G	16004852
15	Hard disk drive, 250G 5400rpm SATA, Hitachi HTS545025B9A300	16004060
15	Hard disk drive, 250G 5400rpm SATA, WD2500BPVT-24JJ5T0 5400RPM 250G HDD (Z475)	16200021
15	Hard disk drive, 250G 5400rpm SATA, Seagate ST9250315AS	16004186
15	Hard disk drive, 250G 5400rpm SATA, Hitachi HTS543225A7A384	16005023
15	Hard disk drive, 250G 5400rpm SATA, Seagate ST250LT003 5400RPM 7MM 250G	16005210
15	Hard disk drive, 250G 5400rpm SATA, Toshiba MK2565GSX 5400RPM 250G	16004641
15	Hard disk drive, 320G 5400rpm SATA, WD 4K sector 320GN 5400RPM250G	16004853
15	Hard disk drive, 320G 5400rpm SATA, Hitachi HTS545032B9A300	16004059
15	Hard disk drive, 320G 5400rpm SATA, WD3200BPVT-24JJ5T0 5400RPM 320G HDD (Z475)	16200022
15	Hard disk drive, 320G 5400rpm SATA, Hitachi HTS543232A7A384 5400RPM 320G	16005024
15	Hard disk drive, 320G 5400rpm SATA, Seagate ST320LT020 5400RPM 7MM 320G	16005211
15	Hard disk drive, 320G 5400rpm SATA, Toshiba MK3265GSX 5400RPM 320G	16004642
15	Hard disk drive, 500G 5400rpm SATA, Seagate ST9500325AS 500G 9NB	16004189
15	Hard disk drive, 500G 5400rpm SATA, WD5000BPVT-24HXZT1 5400RPM 500G	16004846
15	Hard disk drive, 500G 5400rpm SATA, Hitachi HTS545050B9A300 500G 9NB	16004058
15	Hard disk drive, 500G 5400rpm SATA, Toshiba MK5065GSX 5400RPM 500G	16004643

Table 5. Parts list—Overall (continued)

No.	FRU	FRU No.
15	Hard disk drive, 500G 5400rpm SATA, HT HTS547550A9E384 5400RPM 500G HDD	16200006
15	Hard disk drive, 640G 5400rpm SATA, WD6400BPVT-24HXZT1	16004847
15	Hard disk drive, 640G 5400rpm SATA, Toshiba MK6465GSX	16004644
15	Hard disk drive, 640G 5400rpm SATA, Toshiba MK6475GSX 5400RPM 640G	16005335
15	Hard disk drive, 640G 5400rpm SATA, Seagate ST9640423AS 5400RPM 640G HDD	16200009
15	Hard disk drive, 640G 5400rpm SATA, HT HTS547564A9E384 5400RPM 640G HDD	16200007
15	Hard disk drive, 750G 5400rpm SATA, WD7500BPVT-24HXZT1	16004848
15	Hard disk drive, 750G 5400rpm SATA, Seagate ST9750423AS	16005333
15	Hard disk drive, 750G 5400rpm SATA, Toshiba MK7575GSX	16005334
15	Hard disk drive, 750G 5400rpm SATA, HT HTS547575A9E384 5400RPM 750G HDD	16200008
15	Hard disk drive, 320G 7200rpm SATA, Hitachi HTS725032A9A364	16004530
15	Hard disk drive, 320G 7200rpm SATA, Seagate ST9320423AS	16004533
15	Hard disk drive, 320G 7200rpm SATA, WD WD3200BEKT 7200RPM 320G	16005212
15	Hard disk drive, 320G 7200rpm SATA, Hitachi HTS723232A7A364 7200RPM 320G	16005027
15	Hard disk drive, 320G 7200rpm SATA, Seagate ST320LT007 7200RPM 7MM 320G	16005030
15	Hard disk drive, 500G 7200rpm SATA, Hitachi HTS725050A9A364 7200RPM500G	16004531
15	Hard disk drive, 500G 7200rpm SATA, Seagate ST9500423AS 7200RPM 500G HDD	16200020
15	Hard disk drive, 500G 7200rpm SATA, WD WD5000BPKT 7200RPM 500G HDD	16200004
16	ODD, 12.7mm Tray Rambo, HLDS GT33N Tray in Rambo	25011474
16	ODD, 12.7mm Tray Rambo, PLDS DS-8A5S Tray in Rambo	25011187
16	ODD, 12.7mm Tray Rambo, Optiarc AD-7710H Tray in Rambo	25011218
16	ODD, 12.7mm Tray Rambo, TSST TS-L633F Tray in Rambo	25011201
16	ODD, 12.7mm BD Combo Tray, HLDS CT30N Tray in BD Combo	25011473
16	ODD, 12.7mm BD Combo Tray, PLDS DS-6E2SH Tray in BD Combo	25011471

Table 5. Parts list—Overall (continued)

No.	FRU	FRU No.
16	ODD, 12.7mm BD Combo Tray, Optiarc BC-5540H Tray in BD Combo	25011217
16	ODD, 12.7mm BD Rambo, PSN UJ240AF Tray in BD Rambo	25011518
16	ODD, 12.7mm BD Rambo, Optiarc BD-5740H Tray in BD Rambo	25011517
17	KL6 ODD BEZEL (TRAY_IN RAMBO) (Z475)	31049427
17	KL6 BD ODD BEZEL (COMBO) (Z475)	31049429
17	LZ57 ODD BEZEL FOR BLUE RAY (Z575)	31049304
18	KL6 AL THERMAL DOOR ASSY (Z475)	31049441
18	LZ57 HDD DOOR UMA FOR DUAL CORE WO/BUMP (Z575)	31049552

LCD FRUs

In Lenovo Z475/Z575, there are following types of LCDs.

- “14.0-in. HD TFT” (Z475)
- “15.6-in. HD TFT” (Z575)

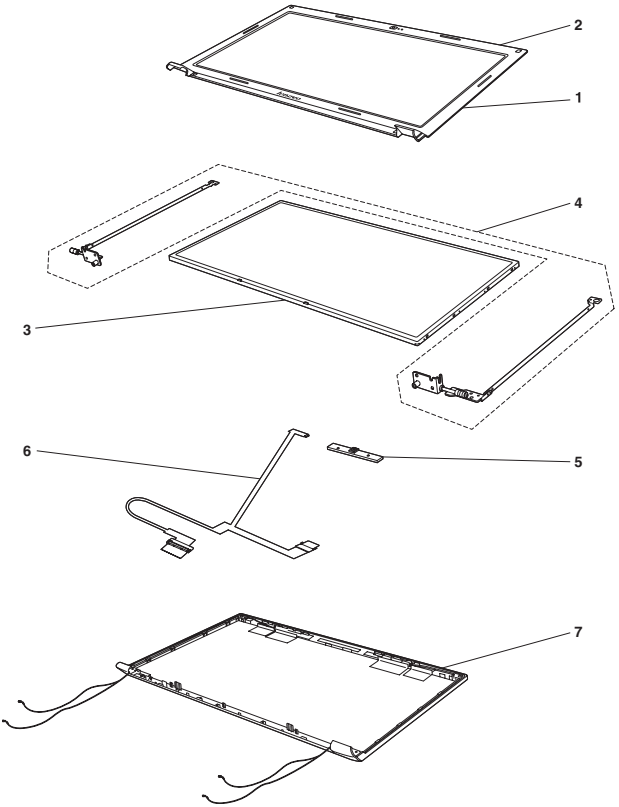

14.0-in. HD TFT

Table 6. Parts list—14.0-in. HD TFT

No.	FRU	FRU No.
1	KL6B LCD BEZEL BLACK W/CAMERA HOLE	31051210
3	14.0 HD LED Panel, B140XW01 V8	18004799
3	14.0 HD LED Panel, N140BGE-L21	18004798
3	14.0 HD LED Panel, LP140WH4-TLA1	18004797
3	14.0 HD LED Panel, LTN140AT16-L01	18004796
3	14.0 HD LED Panel, HT140WXB-501	18004795
4	KL6 LCD BRACKET(HINGE)R+L	31049426
6	KL6 LCD CABLE FOR WXGA LCD 40/30P	31049425
7	KL6 LCD COVER W/WLAN ANTENNA -BLACK	31049414

15.6-in. HD TFT

Table 6. Parts list—13.3-in. HD TFT

No.	FRU	FRU No.
1	LZ575 LCD BEZEL W/CAMERA HOLE	31051028
2	LZ57 LCD SCREW RUBBER	31049318
3	15.6 HD LED Panel, M156NWR2 R0	18004784
3	15.6 HD LED Panel, N156BGE-L21	18004787
3	15.6 HD LED Panel, LP156WH4-TLA1	18004786
3	15.6 HD LED Panel, LTN156AT16-L01	18004785
3	15.6 HD LED Panel, B156XW02 V2	18003797
4	LZ57 LCD BRACKET W/HINGE LEFT	31049308
4	LZ57 LCD BRACKET W/HINGE RIGHT	31049309
5	LZ57 CAMEAR 0.3M VGA 10P2SF016B LITEON	31049300
5	LA47 CAMEAR 2M CHICONY 56.18007.611	31047643
6	LZ57 LVDS CABLE W/CAREMA CABLE	31049297
7	LZ57 LCD COVER GUN-METAL W/ANTENNA	31050911

Keyboard

Table 7. Parts list—Keyboard

Language			P/N
Z475	Chicony	English	25200532
		U.K. English	25200533
		Italian	25200534
		Spanish	25200535
		Turkish	25200536
		Thai	25200538
		Portuguese	25200539
		Latin	25200540
		Canadian English&French	25200541
		Korean	25200542
		Traditional Chinese	25200543
		Russian	25200544
		French	25200545
		German	25200546
		Arabic	25200547
		Brazilian	25200548
		Japanese	25200549
		Dutch	25200550
		Greek	25200551
		Hebrew	25200552
		Hungarian	25200553
		Four Nordic countries	25200554
		Belgian	25200555
		Icelandic	25200556
		Slovenian	25200557
		Swiss	25200558
		International English	25200559
		Czechoslovakian	25200560
		Bulgarian	25200561
		Indian	25200562
	Chicony	English	25200740
		U.K. English	25200741
		Italian	25200742
		Spanish	25200743
		Turkish	25200744
		Thai	25200746
		Portuguese	25200747
		Latin	25200748
		Canadian English&French	25200749
		Korean	25200750
		Traditional Chinese	25200751
		Russian	25200752
		French	25200753
		German	25200754

Table 7. Parts list—Keyboard (continued)

Language			P/N
Z475 (continued)	Chicony (continued)	Arabic	25200755
		Brazilian	25200756
		Japanese	25200757
		Dutch	25200758
		Greek	25200759
		Hebrew	25200760
		Hungarian	25200761
		Four Nordic countries	25200762
		Belgian	25200763
		Icelandic	25200764
		Slovenian	25200765
		Swiss	25200766
		International English	25200767
		Czechoslovakian	25200768
		Bulgarian	25200769
		Indian	25200770

Keyboard

Table 7. Parts list—Keyboard

Language			P/N
Z475	Sunrex	English	25200563
		U.K. English	25200564
		Italian	25200565
		Spanish	25200566
		Turkish	25200567
		Thai	25200569
		Portuguese	25200570
		Latin	25200571
		Canadian English&French	25200572
		Korean	25200573
		Traditional Chinese	25200574
		Russian	25200575
		French	25200576
		German	25200577
		Arabic	25200578
		Brazilian	25200579
		Japanese	25200580
		Dutch	25200581
		Greek	25200582
		Hebrew	25200583
		Hungarian	25200584
		Four Nordic countries	25200585
		Belgian	25200586
		Icelandic	25200587
		Slovenian	25200588
		Swiss	25200589
		International English	25200590
		Czechoslovakian	25200591
		Bulgarian	25200592
		Indian	25200593
	Sunrex	English	25200771
		U.K. English	25200772
		Italian	25200773
		Spanish	25200774
		Turkish	25200775
		Thai	25200777
		Portuguese	25200778
		Latin	25200779
		Canadian English&French	25200780
		Korean	25200781
		Traditional Chinese	25200782
		Russian	25200783
		French	25200784
		German	25200785

Table 7. Parts list—Keyboard (continued)

Language			P/N
Z475 (continued)	Sunrex (continued)	Arabic	25200786
		Brazilian	25200787
		Japanese	25200788
		Dutch	25200789
		Greek	25200790
		Hebrew	25200791
		Hungarian	25200792
		Four Nordic countries	25200793
		Belgian	25200794
		Icelandic	25200795
		Slovenian	25200796
		Swiss	25200797
		International English	25200798
		Czechoslovakian	25200799
		Bulgarian	25200800
		Indian	25200801

Keyboard

Table 7. Parts list—Keyboard

Language			P/N
Z475	Dafon	English	25200594
		U.K. English	25200595
		Italian	25200596
		Spanish	25200597
		Turkish	25200598
		Thai	25200600
		Portuguese	25200601
		Latin	25200602
		Canadian English&French	25200603
		Korean	25200604
		Traditional Chinese	25200605
		Russian	25200606
		French	25200607
		German	25200608
		Arabic	25200609
		Brazilian	25200610
		Japanese	25200611
		Dutch	25200612
		Greek	25200613
		Hebrew	25200614
		Hungarian	25200615
		Four Nordic countries	25200616
		Belgian	25200617
		Icelandic	25200618
		Slovenian	25200619
		Swiss	25200620
		International English	25200621
		Czechoslovakian	25200622
		Bulgarian	25200623
		Indian	25200624

Keyboard

Table 7. Parts list—Keyboard

Language			P/N
Z575	Chicony	English	25200833
		U.K. English	25200834
		Italian	25200835
		Spanish	25200836
		Turkish	25200837
		Thai	25200839
		Portuguese	25200840
		Latin	25200841
		Canadian English&French	25200842
		Korean	25200843
		Traditional Chinese	25200844
		Russian	25200845
		French	25200846
		German	25200847
		Arabic	25200848
		Brazilian	25200849
		Japanese	25200850
		Dutch	25200851
		Greek	25200852
		Hebrew	25200853
		Hungarian	25200854
		Four Nordic countries	25200855
		Belgian	25200856
		Icelandic	25200857
		Slovenian	25200858
		Swiss	25200859
		International English	25200860
		Czechoslovakian	25200861
		Bulgarian	25200862
		Indian	25200863
	Chicony	English	25200926
		U.K. English	25200927
		Italian	25200928
		Spanish	25200929
		Turkish	25200930
		Thai	25200932
		Portuguese	25200933
		Latin	25200934
		Canadian English&French	25200935
		Korean	25200936
		Traditional Chinese	25200937
		Russian	25200938
		French	25200939
		German	25200940

Table 7. Parts list—Keyboard (continued)

Language			P/N
Z575 (continued)	Chicony (continued)	Arabic	25200941
		Brazilian	25200942
		Japanese	25200943
		Dutch	25200944
		Greek	25200945
		Hebrew	25200946
		Hungarian	25200947
		Four Nordic countries	25200948
		Belgian	25200949
		Icelandic	25200950
		Slovenian	25200951
		Swiss	25200952
		International English	25200953
		Czechoslovakian	25200954
		Bulgarian	25200955
		Indian	25200956

Keyboard

Table 7. Parts list—Keyboard

Language			P/N
Z575	Sunrex	English	25200864
		U.K. English	25200865
		Italian	25200866
		Spanish	25200867
		Turkish	25200868
		Thai	25200870
		Portuguese	25200871
		Latin	25200872
		Canadian English&French	25200873
		Korean	25200874
		Traditional Chinese	25200875
		Russian	25200876
		French	25200877
		German	25200878
		Arabic	25200879
		Brazilian	25200880
		Japanese	25200881
		Dutch	25200882
		Greek	25200883
		Hebrew	25200884
		Hungarian	25200885
		Four Nordic countries	25200886
		Belgian	25200887
		Icelandic	25200888
		Slovenian	25200889
		Swiss	25200890
		International English	25200891
		Czechoslovakian	25200892
		Bulgarian	25200893
		Indian	25200894
	Sunrex	English	25200957
		U.K. English	25200958
		Italian	25200959
		Spanish	25200960
		Turkish	25200961
		Thai	25200963
		Portuguese	25200964
		Latin	25200965
		Canadian English&French	25200966
		Korean	25200967
		Traditional Chinese	25200968
		Russian	25200969
		French	25200970
		German	25200971

Table 7. Parts list—Keyboard (continued)

Language			P/N
Z575 (continued)	Sunrex (continued)	Arabic	25200972
		Brazilian	25200973
		Japanese	25200974
		Dutch	25200975
		Greek	25200976
		Hebrew	25200977
		Hungarian	25200978
		Four Nordic countries	25200979
		Belgian	25200980
		Icelandic	25200981
		Slovenian	25200982
		Swiss	25200983
		International English	25200984
		Czechoslovakian	25200985
		Bulgarian	25200986
		Indian	25200987
Z575	Chicony	English	25200895
		U.K. English	25200896
		Italian	25200897
		Spanish	25200898
		Turkish	25200899
		Thai	25200901
		Portuguese	25200902
		Latin	25200903
		Canadian English&French	25200904
		Korean	25200905
		Traditional Chinese	25200906
		Russian	25200907
		French	25200908
		German	25200909
		Arabic	25200910
		Brazilian	25200911
		Japanese	25200912
		Dutch	25200913
		Greek	25200914
		Hebrew	25200915
		Hungarian	25200916
		Four Nordic countries	25200917
		Belgian	25200918
		Icelandic	25200919
		Slovenian	25200920
		Swiss	25200921
		International English	25200922
		Czechoslovakian	25200923
		Bulgarian	25200924
		Indian	25200925

Keyboard

Table 7. Parts list—Keyboard

Language			P/N
Z575	Dafon	English	25200988
		U.K. English	25200989
		Italian	25200990
		Spanish	25200991
		Turkish	25200992
		Thai	25200994
		Portuguese	25200995
		Latin	25200996
		Canadian English&French	25200997
		Korean	25200998
		Traditional Chinese	25200999
		Russian	25201000
		French	25201001
		German	25201002
		Arabic	25201003
		Brazilian	25201004
		Japanese	25201005
		Dutch	25201006
		Greek	25201007
		Hebrew	25201008
		Hungarian	25201009
		Four Nordic countries	25201010
		Belgian	25201011
		Icelandic	25201012
		Slovenian	25201013
		Swiss	25201014
		International English	25201015
		Czechoslovakian	25201016
		Bulgarian	25201017
		Indian	25201018

Miscellaneous parts

Table 8. Parts list—Miscellaneous parts

FRU	FRU No.
System miscellaneous parts:	
• (a) LZ57 TOUCHPAD BRACKET (Z575)	31049307
• (b) KL6 HDD BRACKET ASSY (Z475)	31049443
• (b) LA57 HDD BRACKET ASSY (Z575)	31048979
• (c) KL6 ODD BRACKET FBKL6011,REV3A (Z475)	31049428
• (c) LA46 ODD BRKT (Z575)	31043255
Cable miscellaneous parts:	
• (d) KL6 USB CABLE FOR DC IN/USB BOARD (Z475)	31049430
• (d) KL6 DC IN CABLE FOR DC IN/USB BOARD (Z475)	31049431
• (d) LZ575 RJ45/USB BOARD W/CABLE (Z575)	11013819
• (d) LZ575 DC-IN CABLE (Z575)	31051027
• (e) LZ575 CARD READER BOARD W/CABLE (Z575)	31051026
• (f) LZ57 POWER BOARD CABLE (Z575)	31049298
• (g) LZ57 CAPACITIVE BUTTON BOARD W/CABLE (Z575)	
• (g) LA57 TOUCHPAD CABLE (Z575)	31049295
• (h) KL2 BT CABLE ASSY (Z475)	31048986
• (h) LA57 BT CABLE (Z575)	31042935
Note: Italicized letters in parentheses are references to the exploded view in "Overall" on page 71.	31048987

AC adapters

Table 9. Parts list—3-pin AC adapters

FRU	P/N
65W, Delta ADP-65KH BD 20V/3.25A adapter	36001929
65W, Liteon PA-1650-56LC adapter	36001651
65W, Brazil PA-1650-52LB adapter	36001714
65W, Chicony CPA-A065 20V3.25A adapter	36001943
90W, Delta ADP-90DD BD 20V4.5A adapter	36001941
90W, Liteon PA-1900-56LC 20V4.5A adapter	36001927
90W, Chicony CPA-A090 20V4.5A adapter	36001942

Power cords

A Lenovo power cord for a specific country or region is usually available only in that country or region:

Table 10. Parts list—3-pin power cords

Region	P/N
CCC • SSD YD-118-1+IEC53RVV+SSD-3-2B-1 1m	145000602
CCC • LINETEK PC323+RVV300/300+LS15 1m	145000600
Argentina • LINETEK LS15+H03VV-F+LP39 1m	145000599
Danmark • LINETEK LS15+H03VV-F+LP-38 1m	145000598
Switzerland • LINETEK LS15+H03VV-F+LP-37 1m	145000597
Brazil • LINETEK LS15 H03VV-F LP26A 1m	145000596
Israel • LINETEK LS15+H03VV-F+LP-41 1m	145000595
UL • LINETEK LP-30B + SPT-2 + LS15 1m	145000594
UK • LINETEK LP-61L+ H03VV-F+ LS15 1m	145000593
Indian • LINETEK PE-361+ H05VV-F+ LS15 1m	145000592
Italy • LINETEK LS15+H03VV-F+PE-336 1m	145000591
Korea • LINETEK LS15+H05VV-F+LP-E04A 1m	145000590
Australia • LINETEK LS15+H03VV-F+LP-23A 1m	145000589
Taiwan • LINETEK LS15+VCTF+LP-53 1m	145000588
Japan • LINETEK LS15+VCTF+LP-54 1m	145000587
Africa • LINETEK LS15+H03VV-F+PE-364 1m	145000586
CE • LINETEK LP-34+H03VV-F + LS15 1m	145000585
CCC • Longwell LSG-31+RVV300/300+LS-18 1m	145000568
Argentina • Longwell LP-24+H03VV-F+LS-18 1m	145000567
Danmark • Longwell LP-40+H03VV-F+LS-18 1m	145000566
Switzerland • Longwell LP-37+H03VV-F+LS-18 1m	145000565

Table 10. Parts list—3-pin power cords (continued)

Region	P/N
Brazil • Longwell LP-46+H03VV-F+LS-18 1m	145000564
Israel • Longwell LP-41+H03VV-F+LS-18 1m	145000563
UL • Longwell LP-30B+SPT-2 18AWG+LS-18 1m	145000562
UK • Longwell LP-61L+H03VV-F+LS-18 1m	145000561
Indian • Longwell LP-67+BIS+LS-18 1m	145000560
Italy • Longwell LP-22+H03VV-F+LS-18 1m	145000559
Korea • Longwell LP-486+KTLH03VV-F+LS-5 1m	145000558
Australia • Longwell LP-23A+LFC-3R+LS-18 1m	145000557
Taiwan • Longwell LP-71+VCTF+LS-33 1m	145000556
Japan • Longwell LP-54+VCTF+LS-18 1m	145000555
Africa • Longwell LP-39+H03VV-F+LS-18 1m	145000554
CE • Longwell LP-34A+H03VV-F+LS-18 1m	145000553
CCC • Volex LSG-31+RVV300/300+LS-18 1m	145000538
Argentina • Volex LP-24+H03VV-F+LS-18 1m	145000528
Danmark • Volex LP-40+H03VV-F+LS-18 1m	145000534
Switzerland • Volex LP-37+H03VV-F+LS-18 1m	145000524
Brazil • Volex LP-46+H03VV-F+LS-18 1m	145000527
Israel • Volex LP-41+H03VV-F+LS-18 1m	145000526
UL • Volex LP-30B+SPT-2 18AWG+LS-18 1m	145000537
UK • Volex LP-61L+H03VV-F+LS-18 1m	145000605
Indian • Volex LP-67+BIS+LS-18 1m	145000536
Italy • Volex LP-22+H03VV-F+LS-18 1m	145000535

Table 10. Parts list—3-pin power cords (continued)

Region	P/N
Korea • Volex LP-486+KTLH03VV-F+LS-5 1m	145000533
Australia • Volex LP-23A+LFC-3R+LS-18 1m	145000532
Taiwan • Volex LP-71+VCTF+LS-33 1m	145000531
Japan • Volex LP-54+VCTF+LS-18 1m	145000530
CE • Volex LP-34A+H03VV-F+LS-18 1m	145000525

Notices

Lenovo may not offer the products, services, or features discussed in this document in all countries. Consult your local Lenovo representative for information on the products and services currently available in your area. Any reference to a Lenovo product, program, or service is not intended to state or imply that only that Lenovo product, program, or service may be used. Any functionally equivalent product, program, or service that does not infringe any Lenovo intellectual property right may be used instead. However, it is the user's responsibility to evaluate and verify the operation of any other product, program, or service.

Lenovo may have patents or pending patent applications covering subject matter described in this document. The furnishing of this document does not give you any license to these patents.

LENOVO GROUP LTD. PROVIDES THIS PUBLICATION "AS IS" WITHOUT WARRANTY OF ANY KIND, EITHER EXPRESS OR IMPLIED, INCLUDING, BUT NOT LIMITED TO, THE IMPLIED WARRANTIES OF NON-INFRINGEMENT, MERCHANTABILITY OR FITNESS FOR A PARTICULAR PURPOSE. Some jurisdictions do not allow disclaimer of express or implied warranties in certain transactions, therefore, this statement may not apply to you.

This information could include technical inaccuracies or typographical errors. Changes are periodically made to the information herein; these changes will be incorporated in new editions of the publication. Lenovo may make improvements and/or changes in the product(s) and/or the program(s) described in this publication at any time without notice.

The products described in this document are not intended for use in implantation or other life support applications where malfunction may result in injury or death to persons. The information contained in this document does not affect or change Lenovo product specifications or warranties. Nothing in this document shall operate as an express or implied license or indemnity under the intellectual property rights of Lenovo or third parties. All information contained in this document was obtained in specific environments and is presented as an illustration. The result obtained in other operating environments may vary.

Lenovo may use or distribute any of the information you supply in any way it believes appropriate without incurring any obligation to you.

Any references in this publication to non-Lenovo Web sites are provided for convenience only and do not in any manner serve as an endorsement of those Web sites. The materials at those Web sites are not part of the materials for this Lenovo product, and use of those Web sites is at your own risk.

Any performance data contained herein was determined in a controlled environment. Therefore, the result obtained in other operating environments may vary significantly. Some measurements may have been made on development-level systems and there is no guarantee that these measurements will be the same on generally available systems. Furthermore, some measurements may have been estimated through extrapolation. Actual results may vary. Users of this document should verify the applicable data for their specific environment.

Trademarks

The following terms are either registered trademarks or trademarks of Lenovo in the United States and/or other countries:

Lenovo®
Lenovo logo®
IdeaPad®
OneKey®

Microsoft and Windows are trademarks of Microsoft Corporation in the United States, other countries, or both.

Other company, product, or service names may be the trademarks or service marks of others.